US006778945B2

(12) **United States Patent**
Chassin et al.

(10) **Patent No.: US 6,778,945 B2**
(45) **Date of Patent: Aug. 17, 2004**

(54) **ROOFTOP PACKAGE UNIT DIAGNOSTICIAN**

(75) Inventors: **David P. Chassin**, Pasco, WA (US); **Robert G. Pratt**, Kennewick, WA (US); **Larry Dean Reid**, Benton City, WA (US)

(73) Assignee: **Battelle Memorial Institute**, Richland, WA (US)

(*) Notice: Subject to any disclaimer, the term of this patent is extended or adjusted under 35 U.S.C. 154(b) by 254 days.

(21) Appl. No.: **10/020,849**

(22) Filed: **Dec. 12, 2001**

(65) **Prior Publication Data**

US 2003/0110001 A1 Jun. 12, 2003

(51) **Int. Cl.**[7] **G06F 11/00**

(52) **U.S. Cl.** **702/188**; 700/276; 700/278

(58) **Field of Search** 702/188; 700/276, 700/278

(56) **References Cited**

U.S. PATENT DOCUMENTS

3,979,922 A		9/1976	Shavit	
4,289,272 A		9/1981	Murase et al.	
4,408,169 A		10/1983	Fraser	
5,061,916 A		10/1991	French et al.	
5,103,391 A		4/1992	Barrett	
5,276,630 A		1/1994	Baldwin et al.	
5,292,280 A	*	3/1994	Janu et al.	454/229
5,301,553 A		4/1994	Schultz et al.	
5,311,451 A		5/1994	Barrett	
5,446,677 A		8/1995	Jensen et al.	
5,597,354 A		1/1997	Janu et al.	
5,682,329 A		10/1997	Seem et al.	
5,822,369 A		10/1998	Araki	
6,006,142 A		12/1999	Seem et al.	
6,092,078 A		7/2000	Adolfsson	
6,115,713 A		9/2000	Pascucci et al.	
6,119,125 A		9/2000	Gloudeman et al.	
6,148,306 A		11/2000	Seidl et al.	
6,161,764 A		12/2000	Jatnieks	
6,192,282 B1		2/2001	Smith et al.	
6,217,213 B1		4/2001	Curry et al.	
6,219,590 B1		4/2001	Bernaden, III et al.	

OTHER PUBLICATIONS

"NetBSD Documentation: Writing a pseudo device." Copyright© 1994–2001 The NetBSD Foundation, Inc.

18. Linux character device drivers.

"Use of a PC Printer Port for Control and Data Acquisition," *the Technology Interface*, Fall 1996. (link to *the Technology Interface*, the Electronic Journal for Engineering technology), pp 1–18. Et.nmsu.edu/~etti/fall96/com.

Copyright Ledgister, Floyd, et al. "PC Parallel Port—Sonar Control and Precise Timing Using External Counters," Jun. 13, 1996, pp. 1–17, the Chanda/ECSEL Project. Morgan State University, Baltimore, MD 21239, www.phanderson-.com/printer/timing.html.

(List continued on next page.)

Primary Examiner—John Barlow
Assistant Examiner—Stephen J. Cherry
(74) *Attorney, Agent, or Firm*—Woodard, Emhardt, Moriarty, McNett & Henry LLP

(57) **ABSTRACT**

A diagnostic system for an HVAC system includes a number of sensors used to measure the operation of the HVAC system. Sensor readings are measured by timing the delay between when a strobe signal is sent to a sensor and when an interrupt signal from the sensor is received. A device driver used to measure the sensor readings stores the sensor readings in pseudo-character device files, which are universally accessible by different subsystems of the diagnostic system. Based on the readings from these sensors, this diagnostic system is able to determine the operational status of the HVAC system and if an economizer in the HVAC system is operating properly.

11 Claims, 26 Drawing Sheets

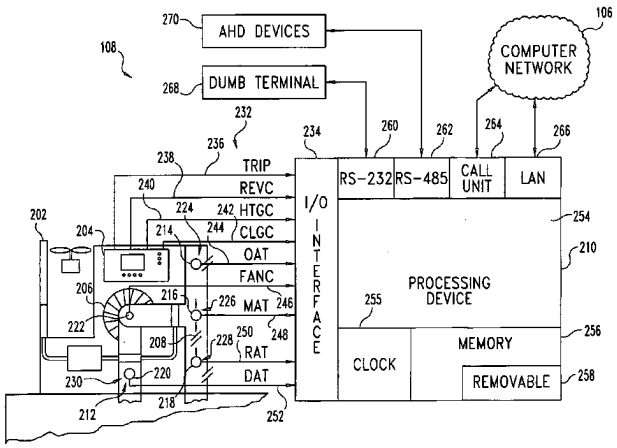

OTHER PUBLICATIONS

"The Parallel Port Manual—Use of a PC Printer Port for Control and Data Acquisition", vol. 1, copyright Peter H. Anderson, Baltimore, MD, Jan., 1996, Morgan State University, Department of Electrical Engineering. ISBN 0–9653357–0–4; LCCN 96–96562.

"The Parallel Port Manual—Use of a PC Printer Port for Control and Data Acquisition", vol. 2, copyright Peter H. Anderson, Baltimore, MD, Jan. 6, 1997, Morgan State University, Department of Electrical Engineering. ISBN 0–9653357.

* cited by examiner

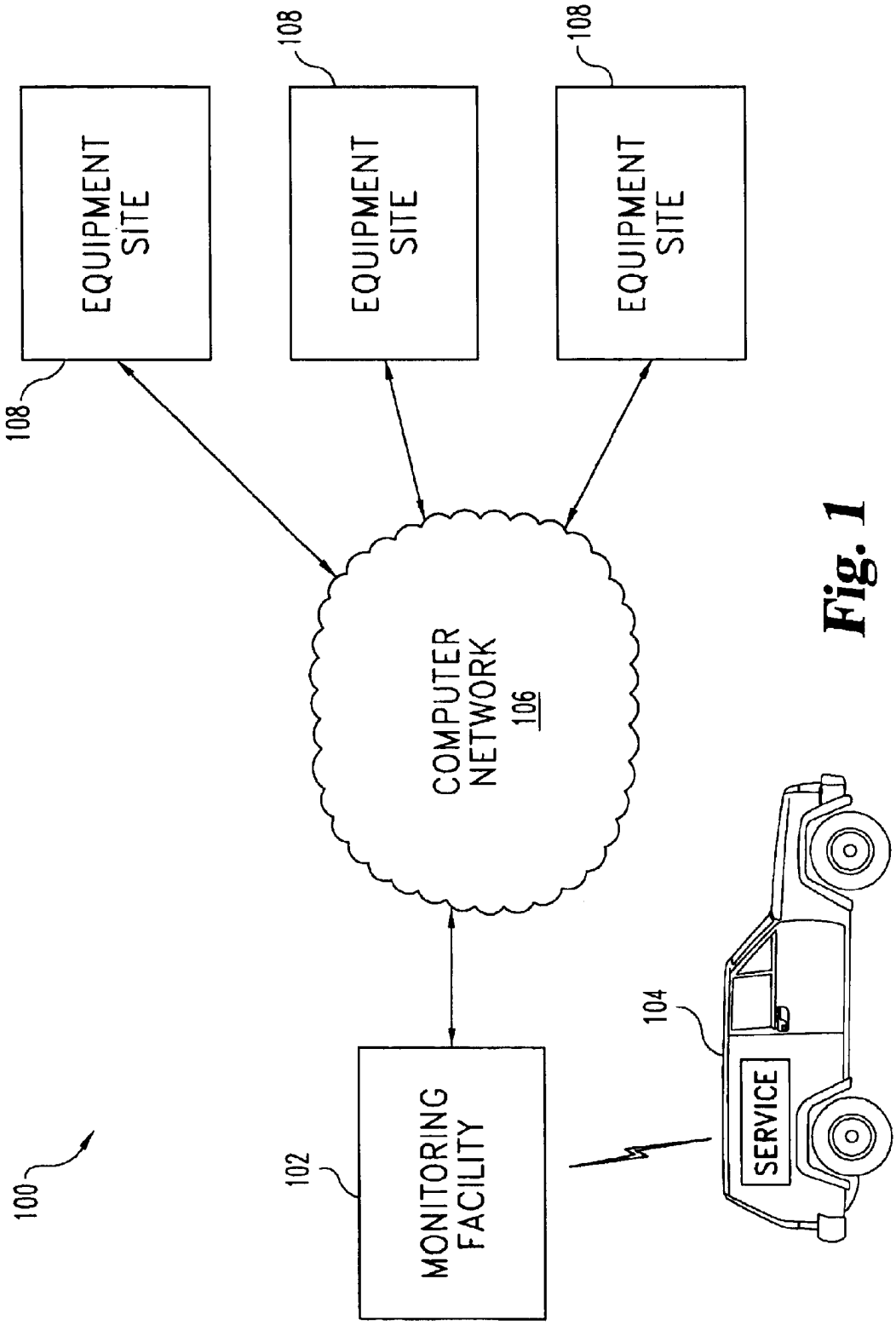
100
108
EQUIPMENT SITE
108
EQUIPMENT SITE
108
EQUIPMENT SITE
COMPUTER NETWORK
106
102
MONITORING FACILITY
104
SERVICE

Fig. 1

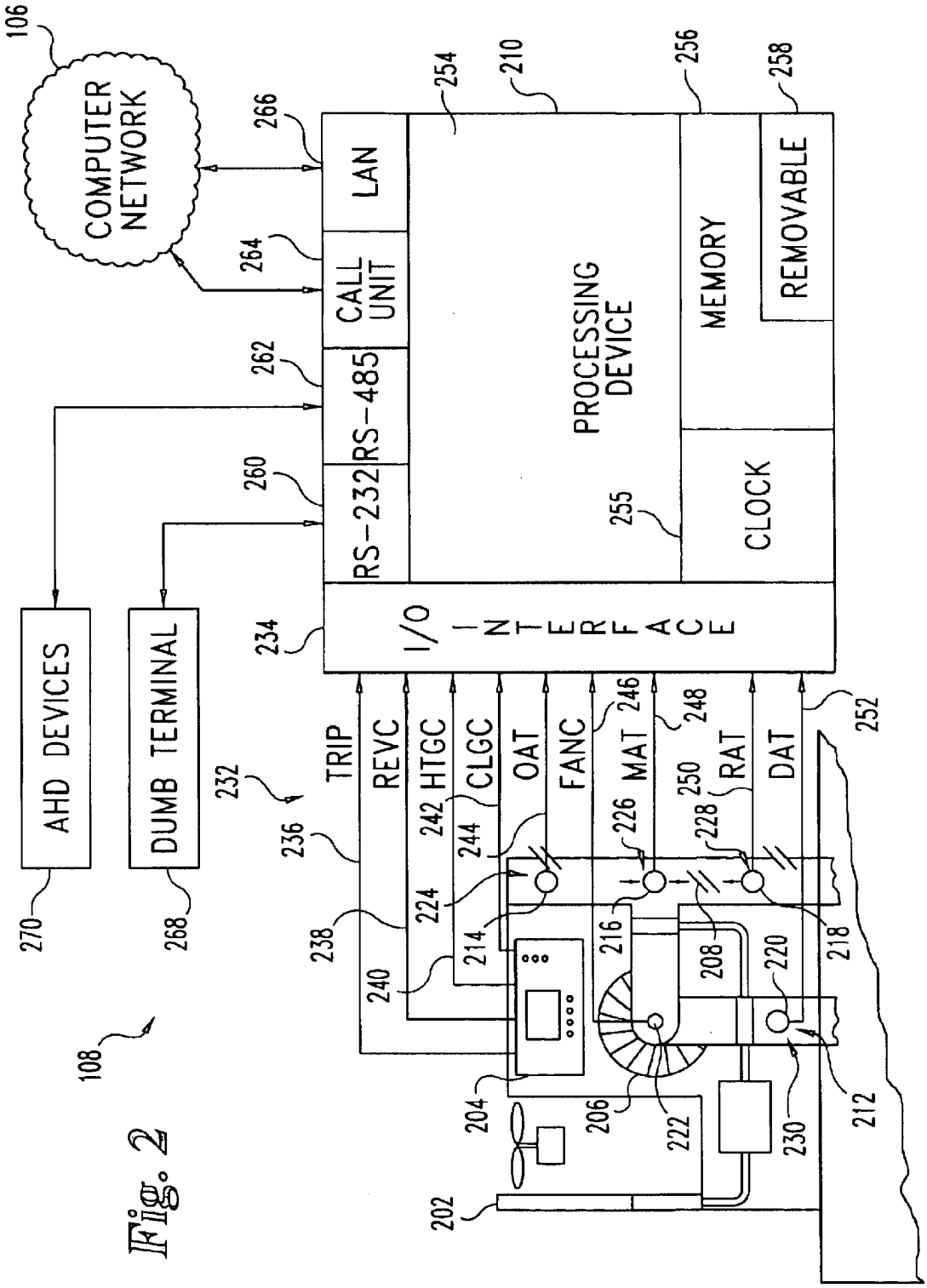
COMPUTER NETWORK
106
LAN
266
CALL UNIT
264
RS-485
262
RS-232
260
PROCESSING DEVICE
254
210
MEMORY
256
REMOVABLE
258
CLOCK
255
I/O INTERFACE
234
AHD DEVICES
270
DUMB TERMINAL
268
232
236
238
240
TRIP
REVC
HTGC
CLGC
OAT
FANC
MAT
RAT
DAT
242
244
224
214
226
216
246
248
250
228
208
218
220
252
204
206
222
230
212
202
108

Fig. 2

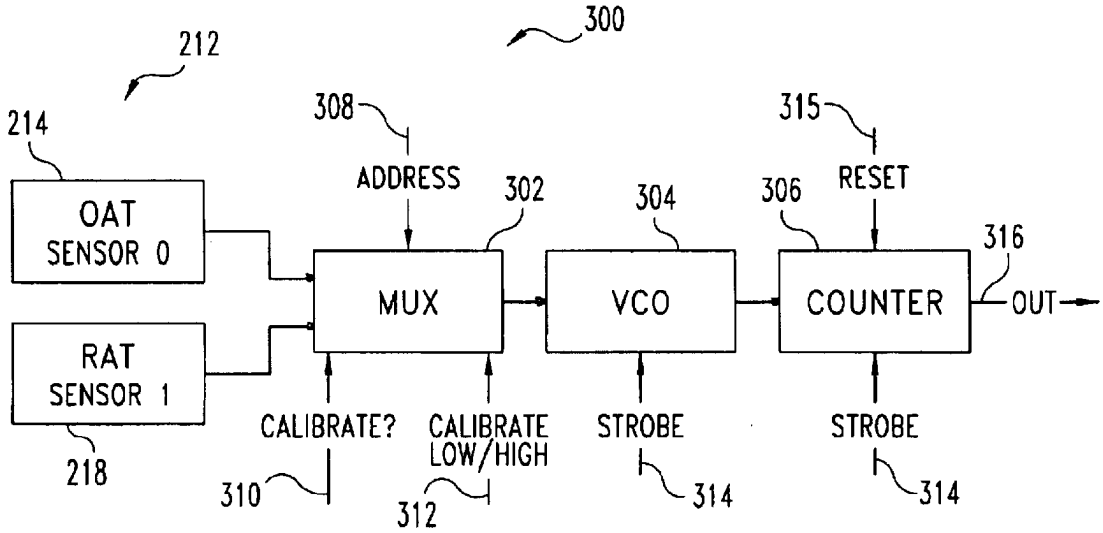
300
212
214
OAT
SENSOR 0
RAT
SENSOR 1
218
308
ADDRESS
302
MUX
304
VCO
306
315
RESET
COUNTER
316
OUT
CALIBRATE?
310
CALIBRATE
LOW/HIGH
312
STROBE
314
STROBE
314

Fig. 3

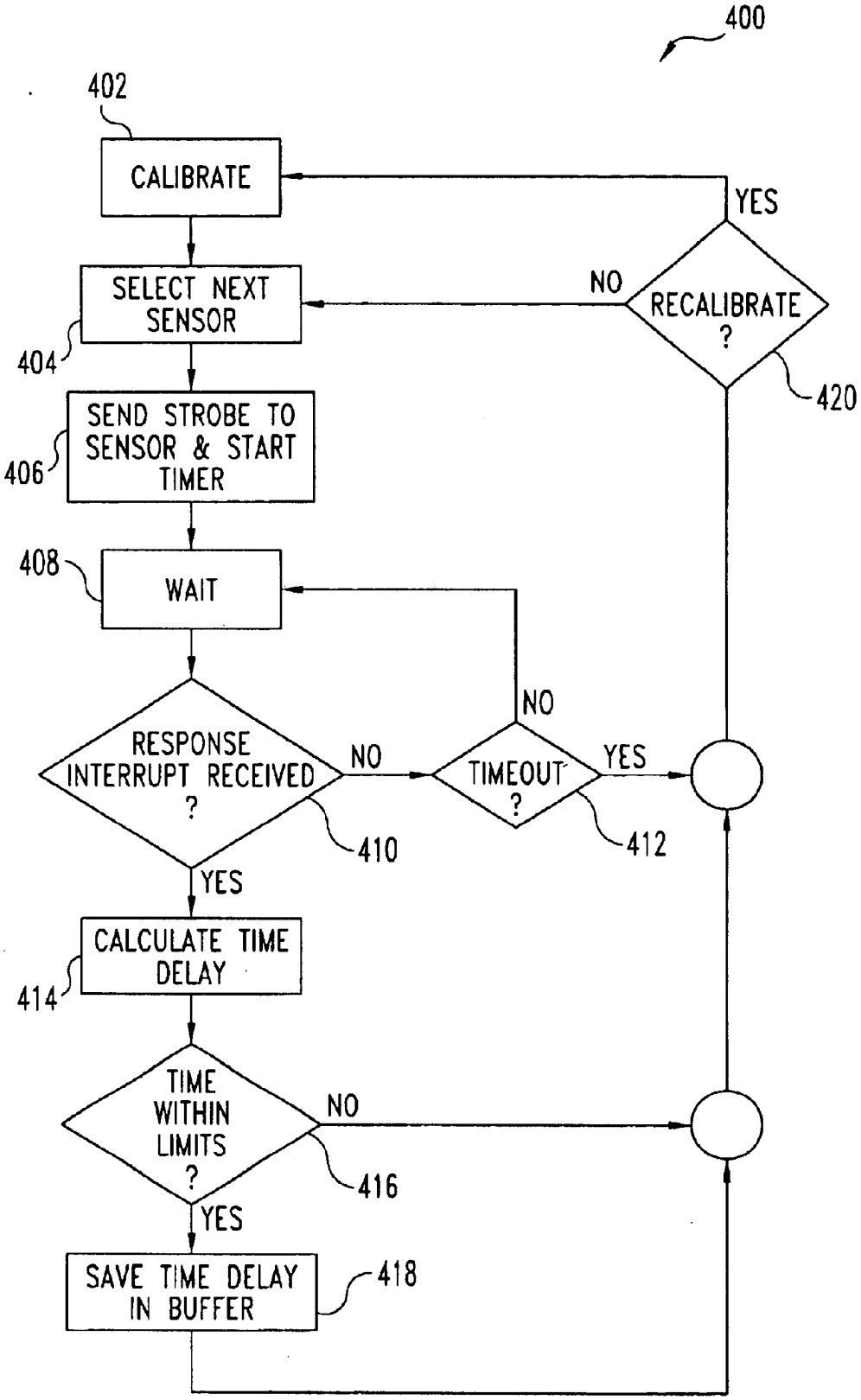
400
402
CALIBRATE
YES
SELECT NEXT SENSOR
NO
RECALIBRATE ?
404
420
SEND STROBE TO SENSOR & START TIMER
406
408
WAIT
NO
RESPONSE INTERRUPT RECEIVED ?
NO
TIMEOUT ?
YES
410
412
YES
CALCULATE TIME DELAY
414
TIME WITHIN LIMITS ?
NO
416
YES
SAVE TIME DELAY IN BUFFER
418

Fig. 4

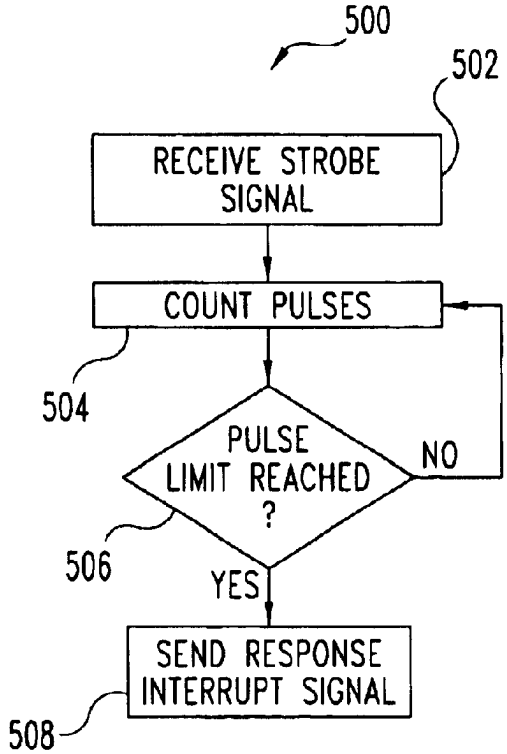
500
502
RECEIVE STROBE SIGNAL
COUNT PULSES
504
PULSE LIMIT REACHED ?
NO
506
YES
SEND RESPONSE INTERRUPT SIGNAL
508

Fig. 5

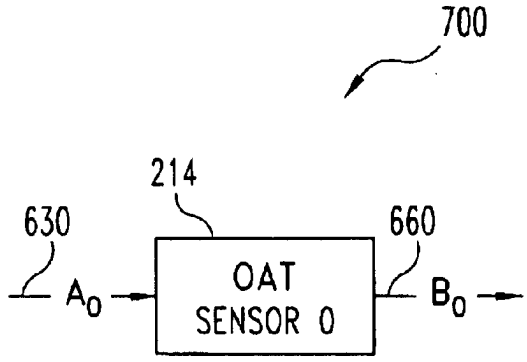
700
214
630
660
A_0
OAT SENSOR 0
B_0

Fig. 7

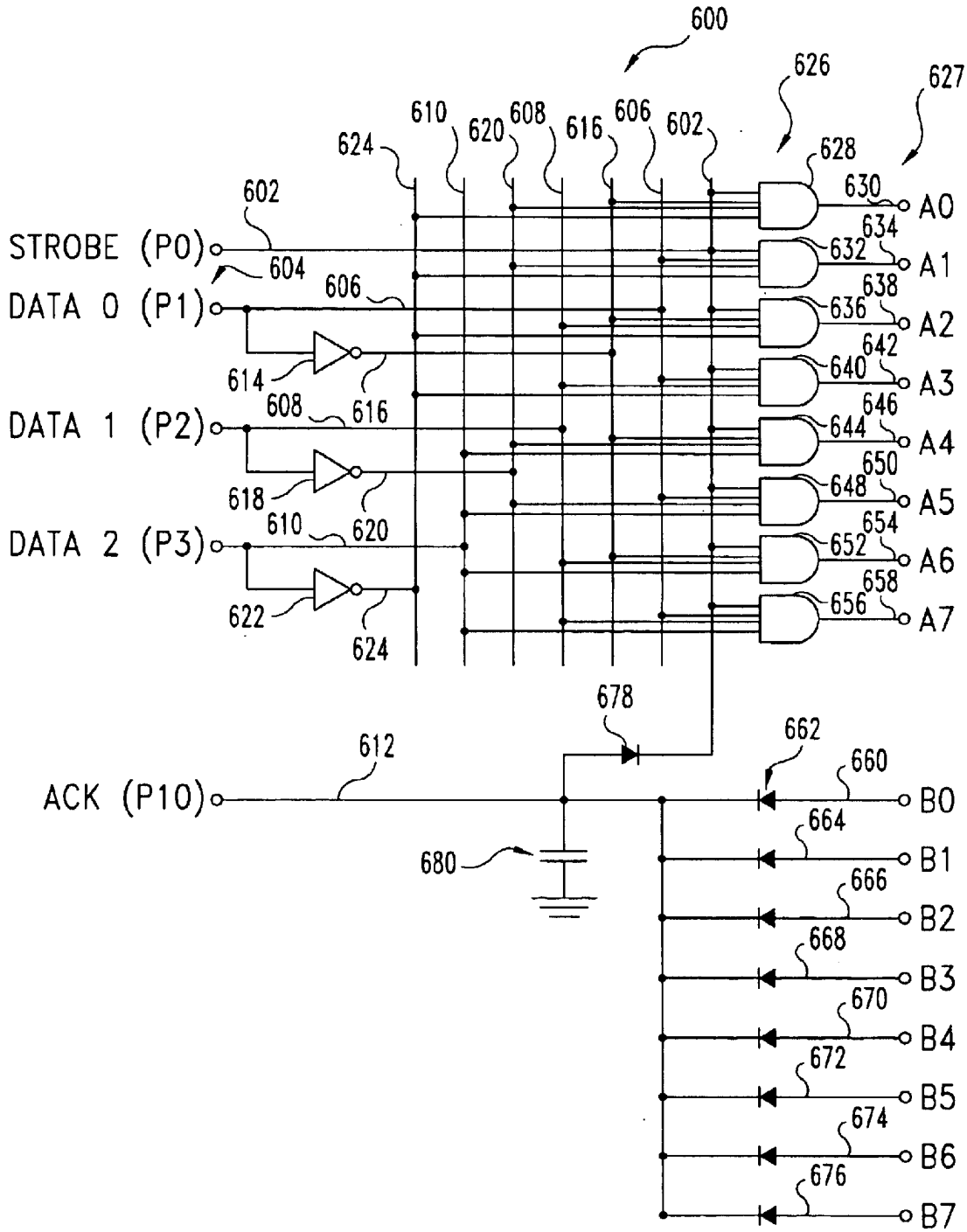
600
626
627
610
620
608
616
606
602
624
628
630
A0
634
632
A1
638
636
A2
642
640
A3
646
644
A4
650
648
A5
654
652
A6
658
656
A7
602
STROBE (P0)
604
606
DATA 0 (P1)
614
608
616
DATA 1 (P2)
618
610
620
DATA 2 (P3)
622
624
678
662
612
660
ACK (P10)
B0
664
B1
680
666
B2
668
B3
670
B4
672
B5
674
B6
676
B7

Fig. 6

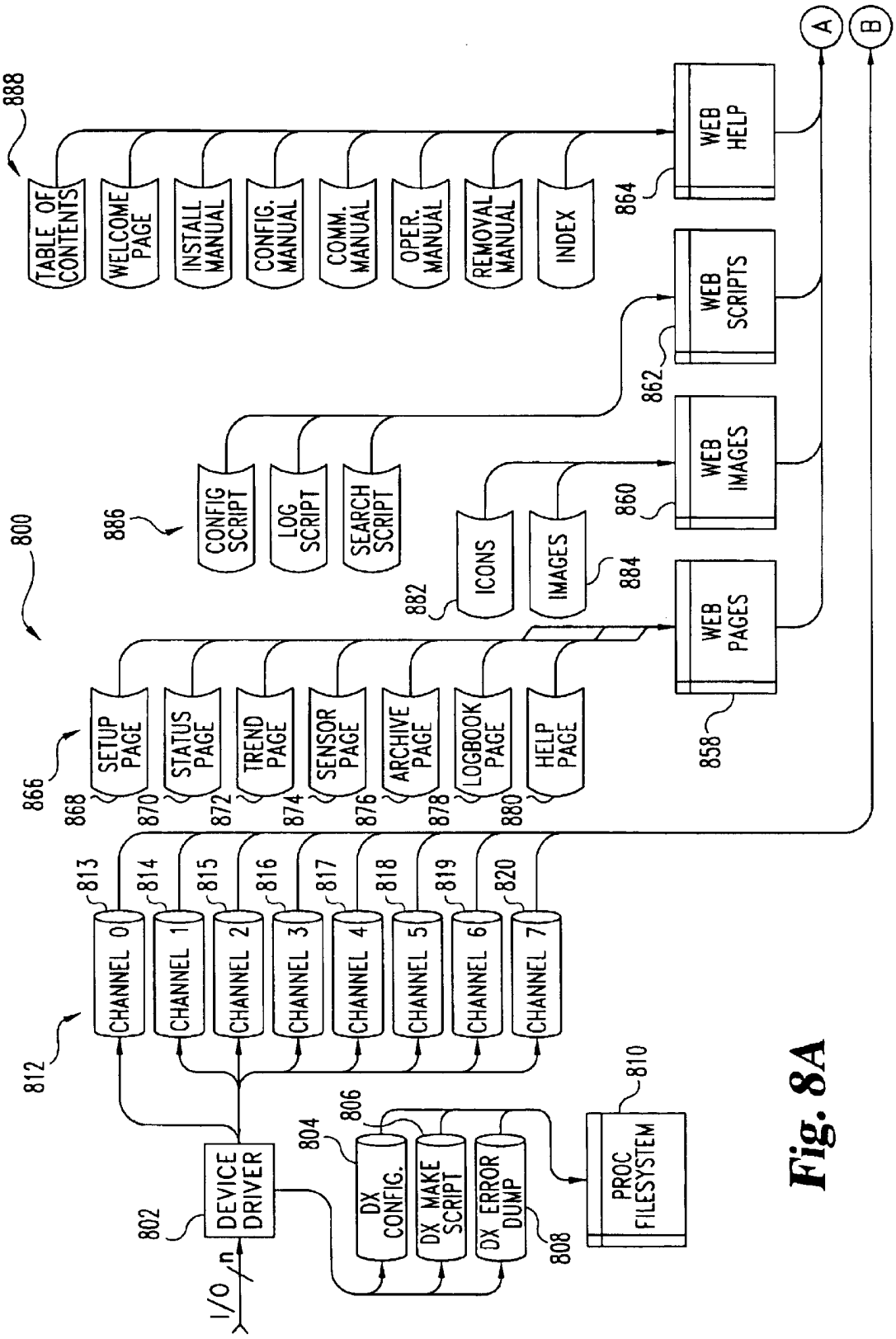
888
TABLE OF CONTENTS
WELCOME PAGE
INSTALL MANUAL
CONFIG. MANUAL
COMM. MANUAL
OPER. MANUAL
REMOVAL MANUAL
INDEX
WEB HELP
864
WEB SCRIPTS
862
WEB IMAGES
860
WEB PAGES
858
A
B
800
886
CONFIG SCRIPT
LOG SCRIPT
SEARCH SCRIPT
882
ICONS
IMAGES
884
866
SETUP PAGE
868
STATUS PAGE
870
TREND PAGE
872
SENSOR PAGE
874
ARCHIVE PAGE
876
LOGBOOK PAGE
878
HELP PAGE
880
812
CHANNEL 0
813
CHANNEL 1
814
CHANNEL 2
815
CHANNEL 3
816
CHANNEL 4
817
CHANNEL 5
818
CHANNEL 6
819
CHANNEL 7
820
802
DEVICE DRIVER
I/O n
804
DX CONFIG.
806
DX MAKE SCRIPT
DX ERROR DUMP
808
PROC FILESYSTEM
810

Fig. 8A

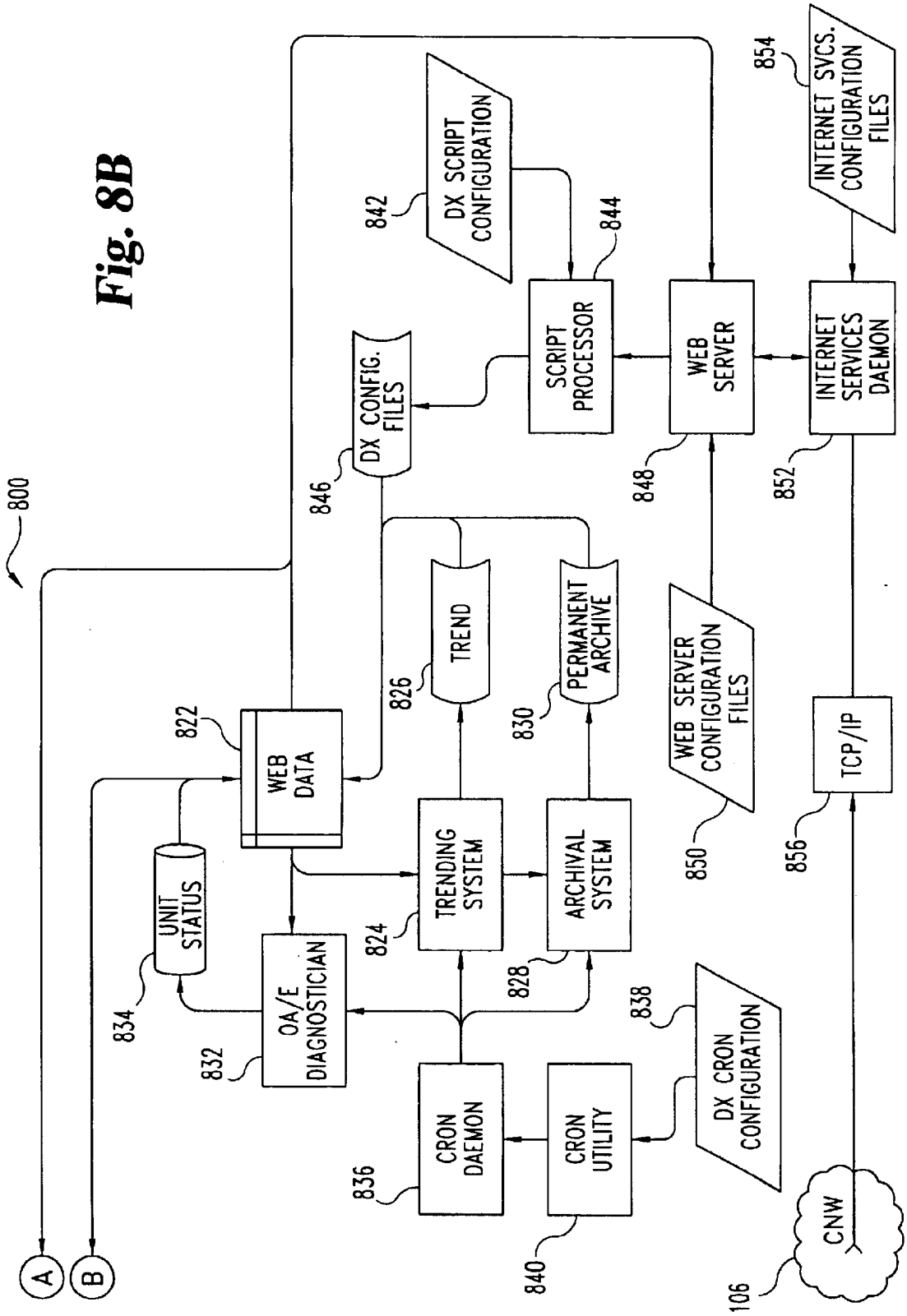
800
A
B
UNIT STATUS
834
WEB DATA
822
OA/E DIAGNOSTICIAN
832
TREND
826
TRENDING SYSTEM
824
PERMANENT ARCHIVE
830
ARCHIVAL SYSTEM
828
CRON DAEMON
836
CRON UTILITY
840
DX CRON CONFIGURATION
838
DX CONFIG. FILES
846
DX SCRIPT CONFIGURATION
842
SCRIPT PROCESSOR
844
WEB SERVER
848
WEB SERVER CONFIGURATION FILES
850
INTERNET SERVICES DAEMON
852
INTERNET SVCS. CONFIGURATION FILES
854
TCP/IP
856
CNW
106

Fig. 8B

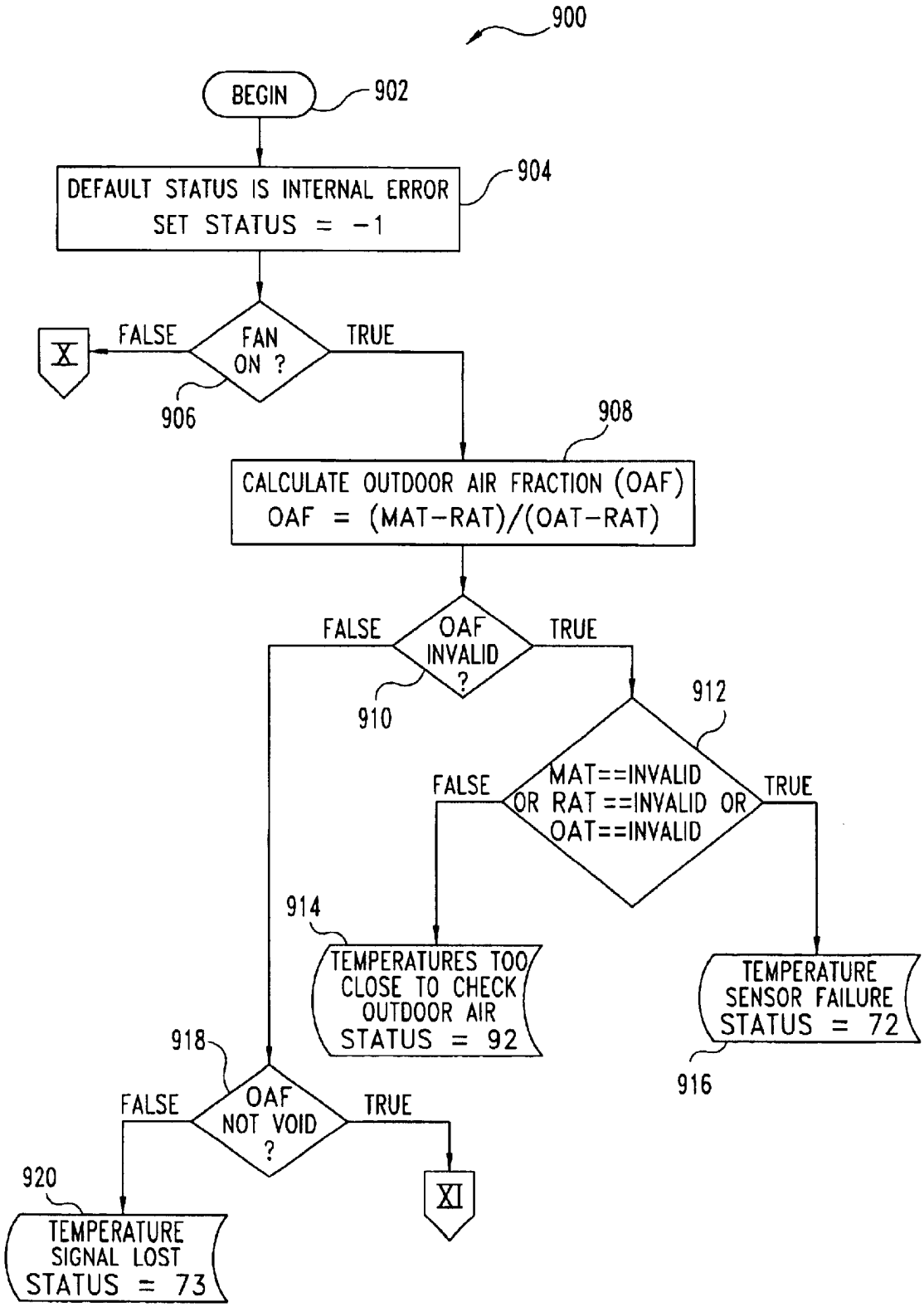
900
BEGIN
902
DEFAULT STATUS IS INTERNAL ERROR
SET STATUS = -1
904
FAN ON ?
FALSE
TRUE
X
906
908
CALCULATE OUTDOOR AIR FRACTION (OAF)
OAF = (MAT-RAT)/(OAT-RAT)
OAF INVALID ?
FALSE
TRUE
910
912
MAT==INVALID OR RAT==INVALID OR OAT==INVALID
FALSE
TRUE
914
TEMPERATURES TOO CLOSE TO CHECK OUTDOOR AIR
STATUS = 92
TEMPERATURE SENSOR FAILURE
STATUS = 72
916
918
OAF NOT VOID ?
FALSE
TRUE
XI
920
TEMPERATURE SIGNAL LOST
STATUS = 73

Fig. 9

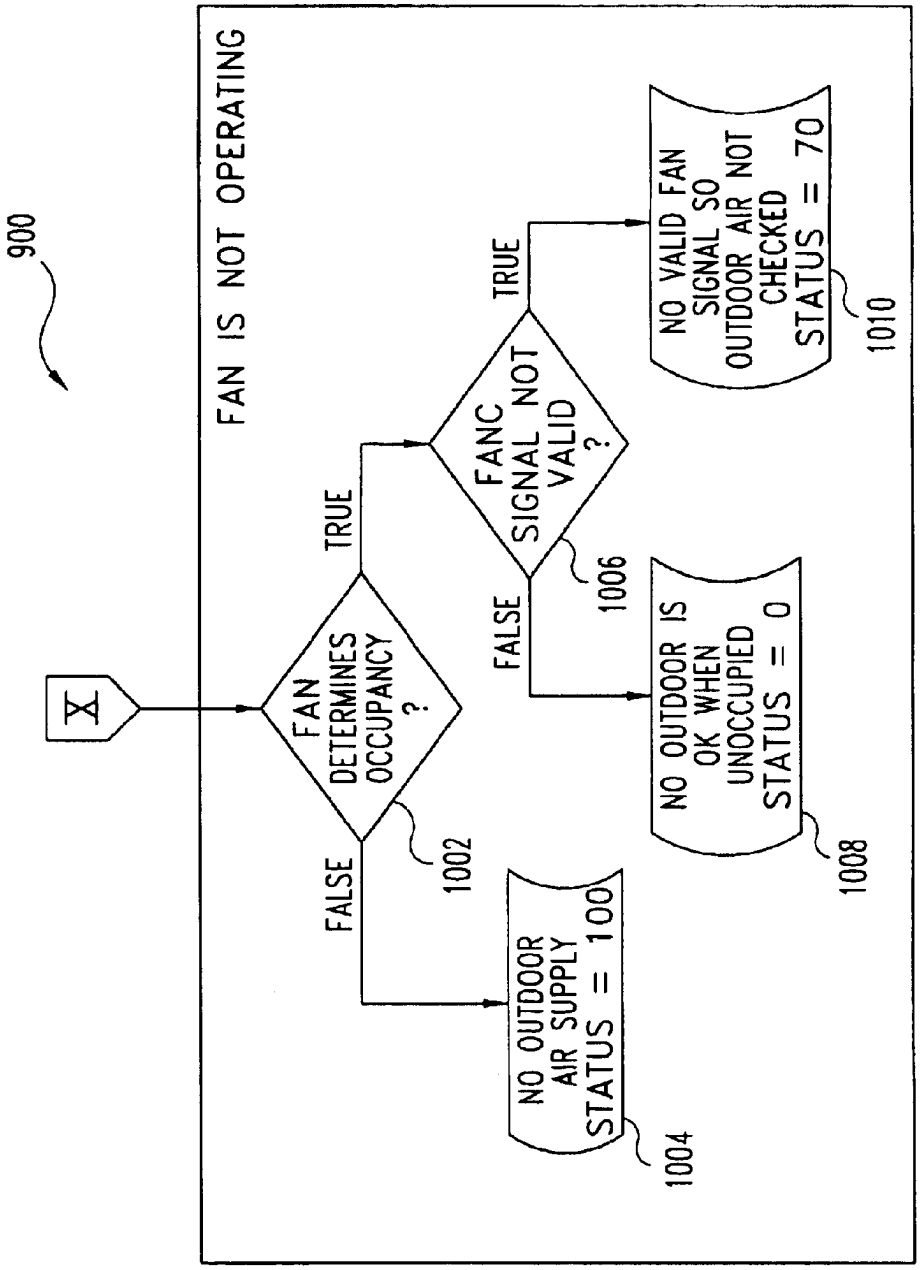
900
X
FAN IS NOT OPERATING
FAN DETERMINES OCCUPANCY ?
1002
TRUE
FALSE
FANC SIGNAL NOT VALID ?
1006
TRUE
FALSE
NO VALID FAN SIGNAL SO OUTDOOR AIR NOT CHECKED STATUS = 70
1010
NO OUTDOOR IS OK WHEN UNOCCUPIED STATUS = 0
1008
NO OUTDOOR AIR SUPPLY STATUS = 100
1004

Fig. 10

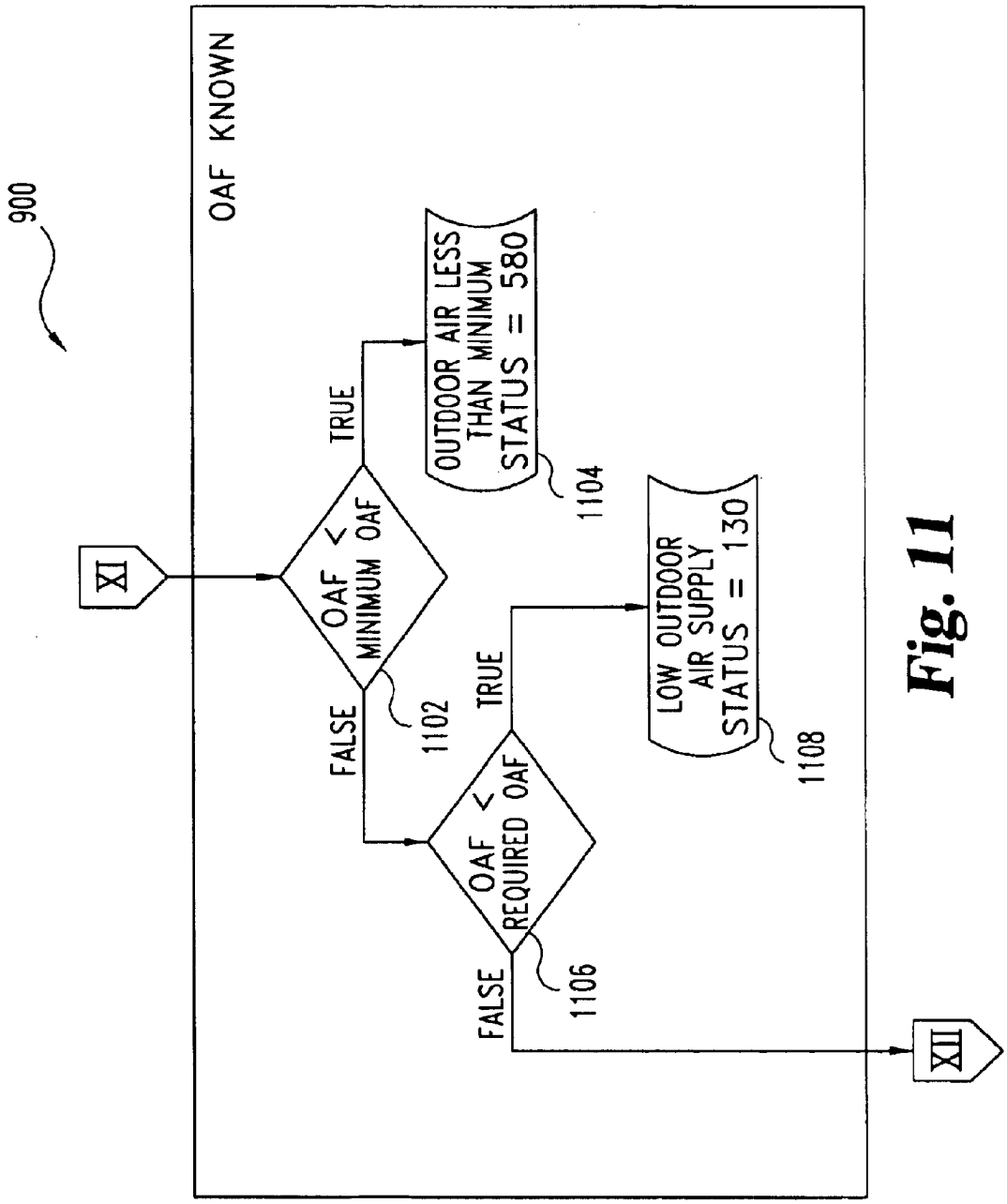
900
OAF KNOWN
XI
OAF < MINIMUM OAF
1102
TRUE
FALSE
OUTDOOR AIR LESS THAN MINIMUM STATUS = 580
1104
OAF < REQUIRED OAF
1106
TRUE
FALSE
LOW OUTDOOR AIR SUPPLY STATUS = 130
1108
XII

Fig. 11

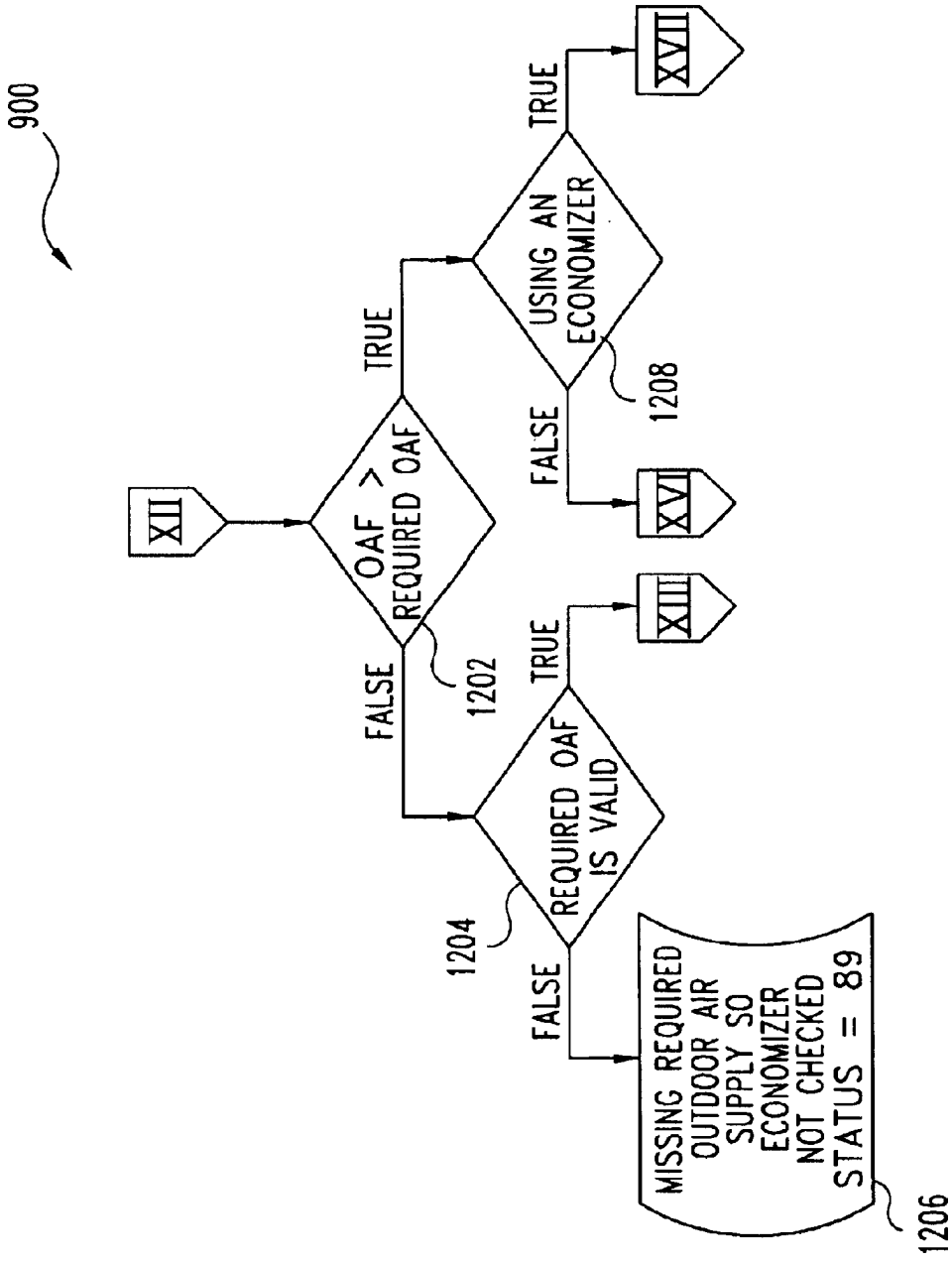
900
XII
OAF > REQUIRED OAF
1202
TRUE
FALSE
USING AN ECONOMIZER
1208
TRUE
FALSE
XVII
XVI
REQUIRED OAF IS VALID
1204
TRUE
FALSE
XIII
MISSING REQUIRED OUTDOOR AIR SUPPLY SO ECONOMIZER NOT CHECKED STATUS = 89
1206

Fig. 12

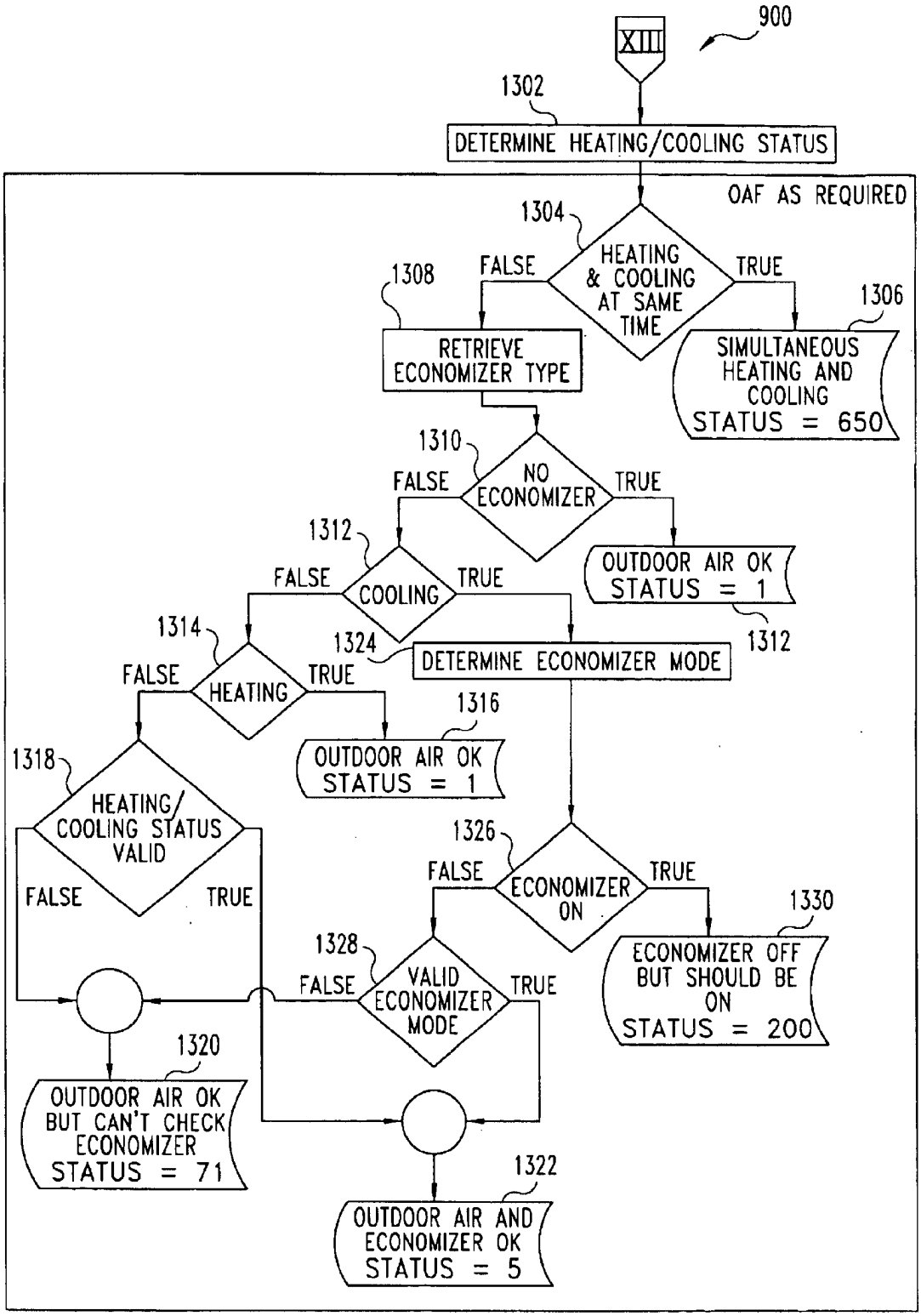
XIII
900
1302
DETERMINE HEATING/COOLING STATUS
OAF AS REQUIRED
1304
HEATING & COOLING AT SAME TIME
FALSE
TRUE
1308
RETRIEVE ECONOMIZER TYPE
1306
SIMULTANEOUS HEATING AND COOLING STATUS = 650
1310
NO ECONOMIZER
FALSE
TRUE
OUTDOOR AIR OK STATUS = 1
1312
1312
COOLING
FALSE
TRUE
1314
HEATING
FALSE
TRUE
1324
DETERMINE ECONOMIZER MODE
1316
OUTDOOR AIR OK STATUS = 1
1318
HEATING/ COOLING STATUS VALID
FALSE
TRUE
1326
ECONOMIZER ON
FALSE
TRUE
1330
ECONOMIZER OFF BUT SHOULD BE ON STATUS = 200
1328
VALID ECONOMIZER MODE
FALSE
TRUE
1320
OUTDOOR AIR OK BUT CAN'T CHECK ECONOMIZER STATUS = 71
1322
OUTDOOR AIR AND ECONOMIZER OK STATUS = 5

Fig. 13

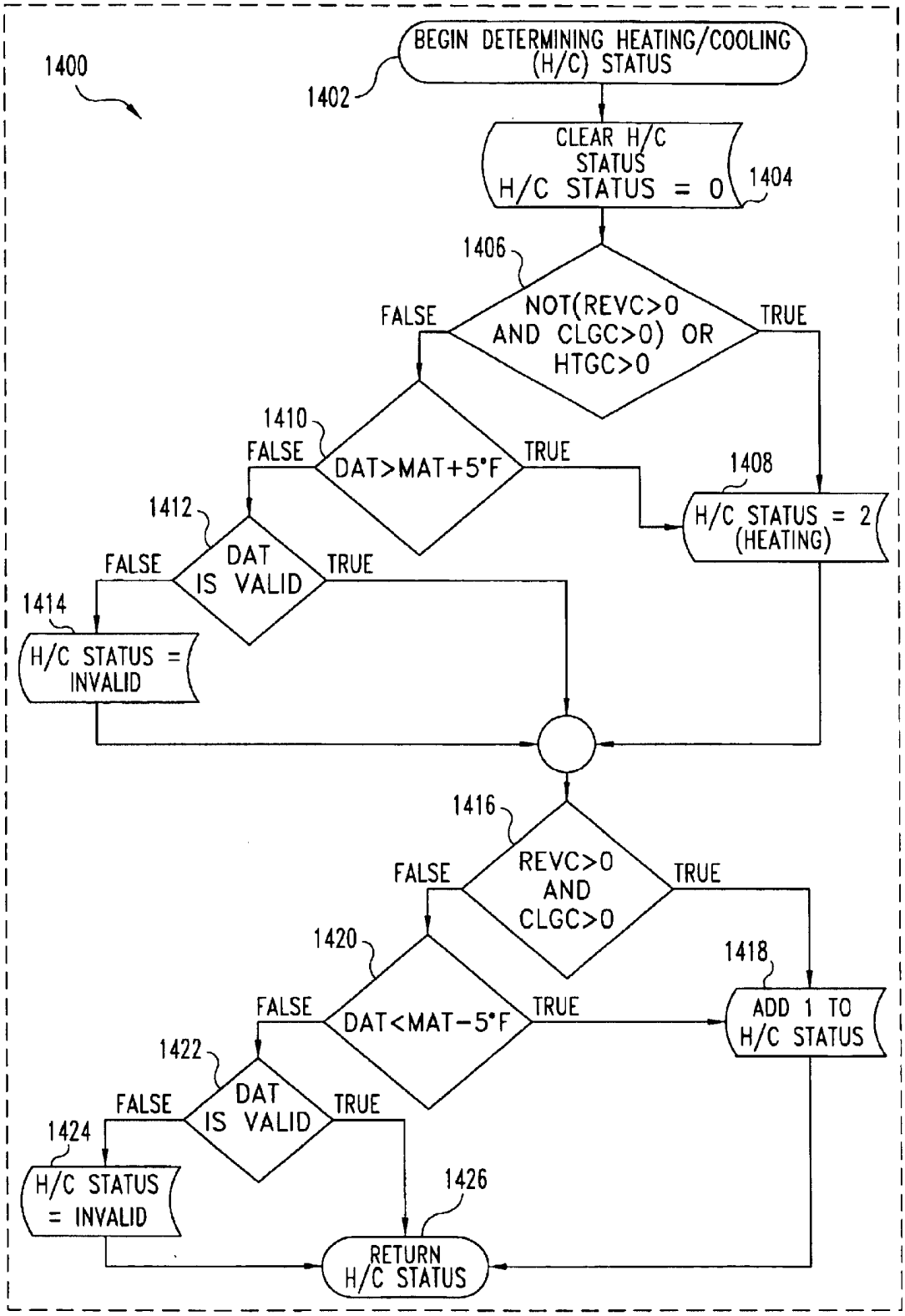
1400
BEGIN DETERMINING HEATING/COOLING (H/C) STATUS
1402
CLEAR H/C STATUS
H/C STATUS = 0
1404
1406
NOT(REVC>0 AND CLGC>0) OR HTGC>0
FALSE
TRUE
1410
DAT>MAT+5°F
FALSE
TRUE
1408
H/C STATUS = 2 (HEATING)
1412
DAT IS VALID
FALSE
TRUE
1414
H/C STATUS = INVALID
1416
REVC>0 AND CLGC>0
FALSE
TRUE
1420
DAT<MAT−5°F
FALSE
TRUE
1418
ADD 1 TO H/C STATUS
1422
DAT IS VALID
FALSE
TRUE
1424
H/C STATUS = INVALID
1426
RETURN H/C STATUS

Fig. 14

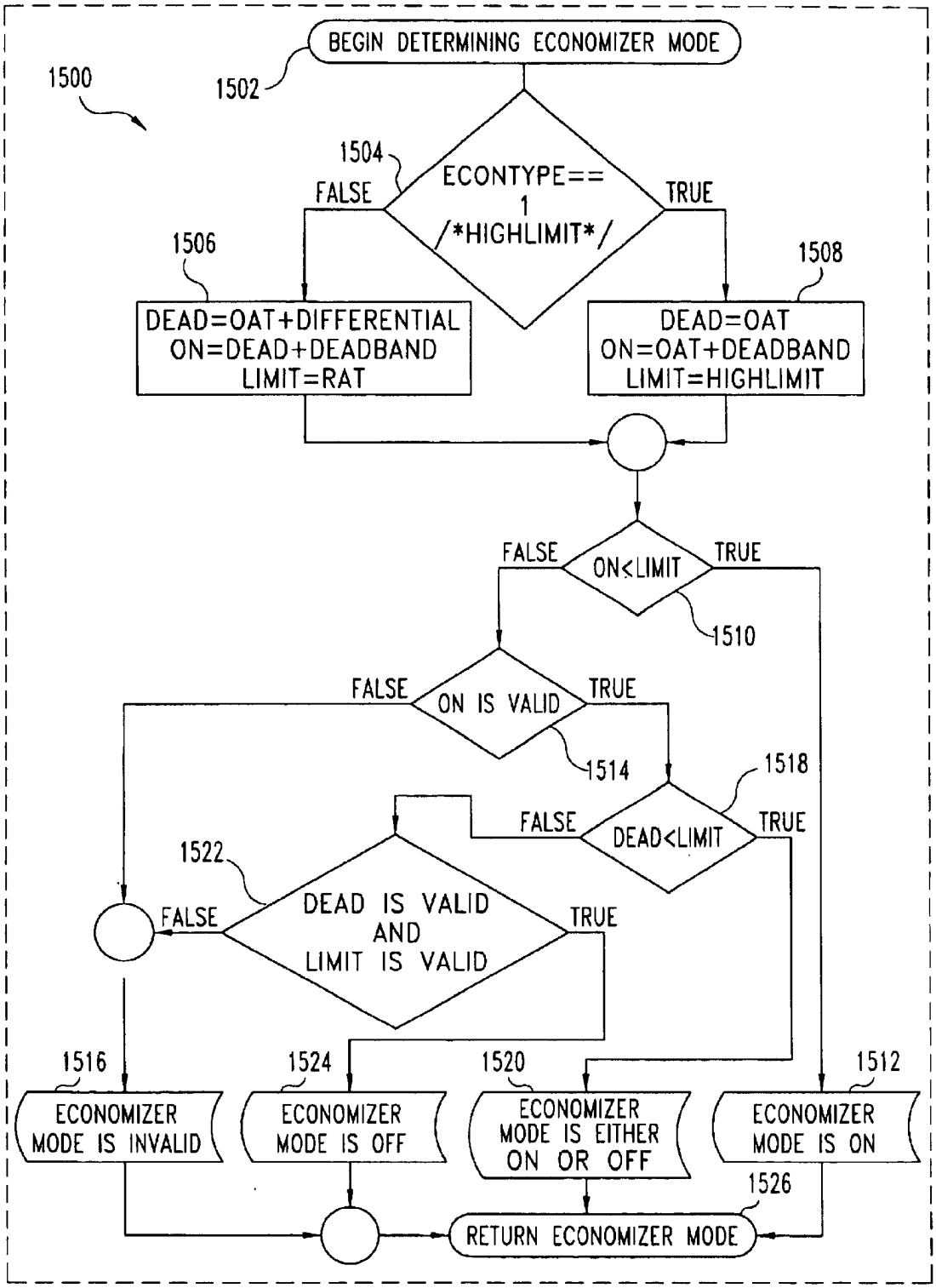
BEGIN DETERMINING ECONOMIZER MODE
1500
1502
1504
ECONTYPE==
1
/*HIGHLIMIT*/
FALSE
TRUE
1506
1508
DEAD=OAT+DIFFERENTIAL
ON=DEAD+DEADBAND
LIMIT=RAT
DEAD=OAT
ON=OAT+DEADBAND
LIMIT=HIGHLIMIT
FALSE
ON<LIMIT
TRUE
1510
FALSE
ON IS VALID
TRUE
1514
1518
FALSE
DEAD<LIMIT
TRUE
1522
FALSE
DEAD IS VALID
AND
LIMIT IS VALID
TRUE
1516
1524
1520
1512
ECONOMIZER
MODE IS INVALID
ECONOMIZER
MODE IS OFF
ECONOMIZER
MODE IS EITHER
ON OR OFF
ECONOMIZER
MODE IS ON
1526
RETURN ECONOMIZER MODE

Fig. 15

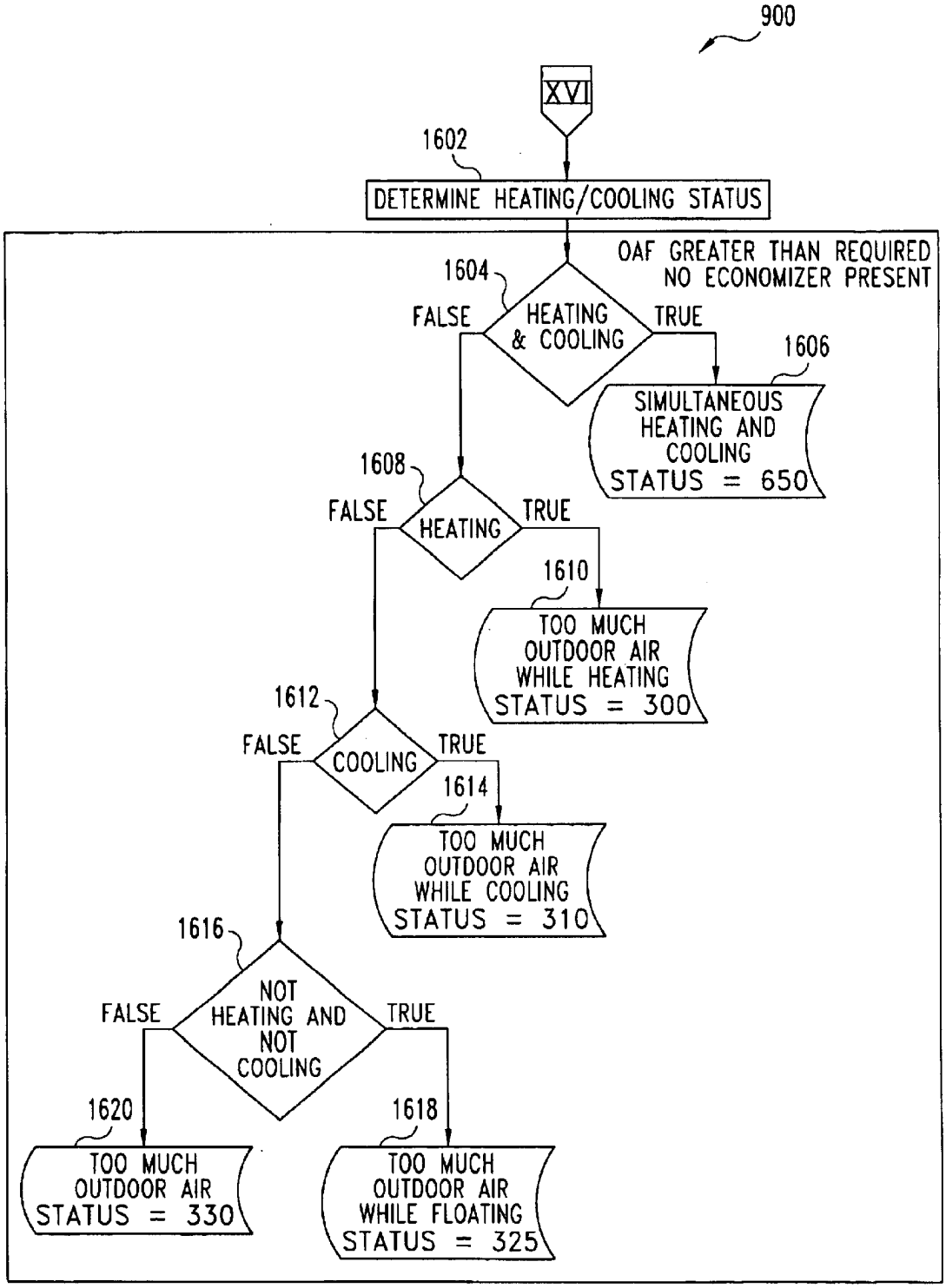
900
XVI
1602
DETERMINE HEATING/COOLING STATUS
OAF GREATER THAN REQUIRED
NO ECONOMIZER PRESENT
1604
HEATING & COOLING
FALSE
TRUE
1606
SIMULTANEOUS HEATING AND COOLING STATUS = 650
1608
HEATING
FALSE
TRUE
1610
TOO MUCH OUTDOOR AIR WHILE HEATING STATUS = 300
1612
COOLING
FALSE
TRUE
1614
TOO MUCH OUTDOOR AIR WHILE COOLING STATUS = 310
1616
NOT HEATING AND NOT COOLING
FALSE
TRUE
1620
TOO MUCH OUTDOOR AIR STATUS = 330
1618
TOO MUCH OUTDOOR AIR WHILE FLOATING STATUS = 325

Fig. 16

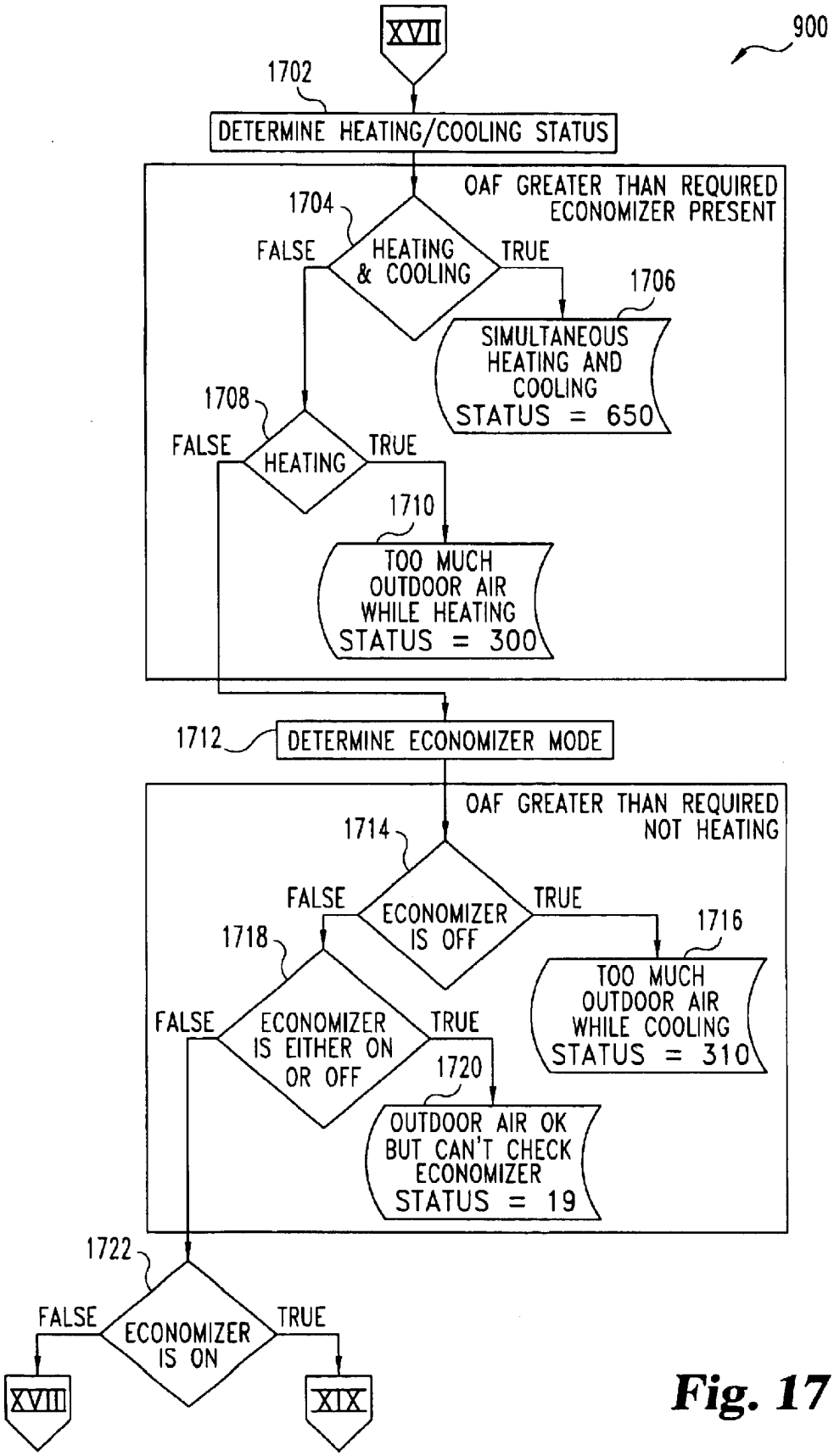
XVII
900
1702
DETERMINE HEATING/COOLING STATUS
OAF GREATER THAN REQUIRED ECONOMIZER PRESENT
1704
HEATING & COOLING
FALSE
TRUE
1706
SIMULTANEOUS HEATING AND COOLING STATUS = 650
1708
HEATING
FALSE
TRUE
1710
TOO MUCH OUTDOOR AIR WHILE HEATING STATUS = 300
1712
DETERMINE ECONOMIZER MODE
OAF GREATER THAN REQUIRED NOT HEATING
1714
ECONOMIZER IS OFF
FALSE
TRUE
1716
TOO MUCH OUTDOOR AIR WHILE COOLING STATUS = 310
1718
ECONOMIZER IS EITHER ON OR OFF
FALSE
TRUE
1720
OUTDOOR AIR OK BUT CAN'T CHECK ECONOMIZER STATUS = 19
1722
ECONOMIZER IS ON
FALSE
TRUE
XVII
XIX

Fig. 17

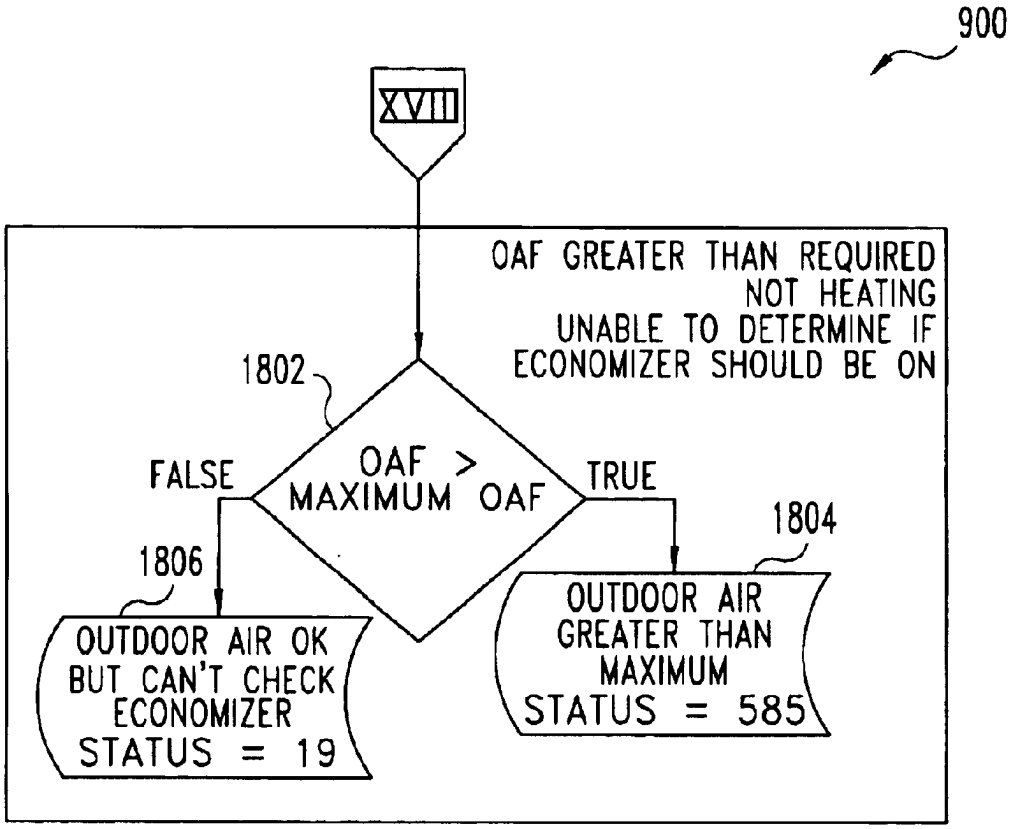
900
XVIII
OAF GREATER THAN REQUIRED
NOT HEATING
UNABLE TO DETERMINE IF
ECONOMIZER SHOULD BE ON
1802
OAF > MAXIMUM OAF
FALSE
TRUE
1806
1804
OUTDOOR AIR OK
BUT CAN'T CHECK
ECONOMIZER
STATUS = 19
OUTDOOR AIR
GREATER THAN
MAXIMUM
STATUS = 585

Fig. 18

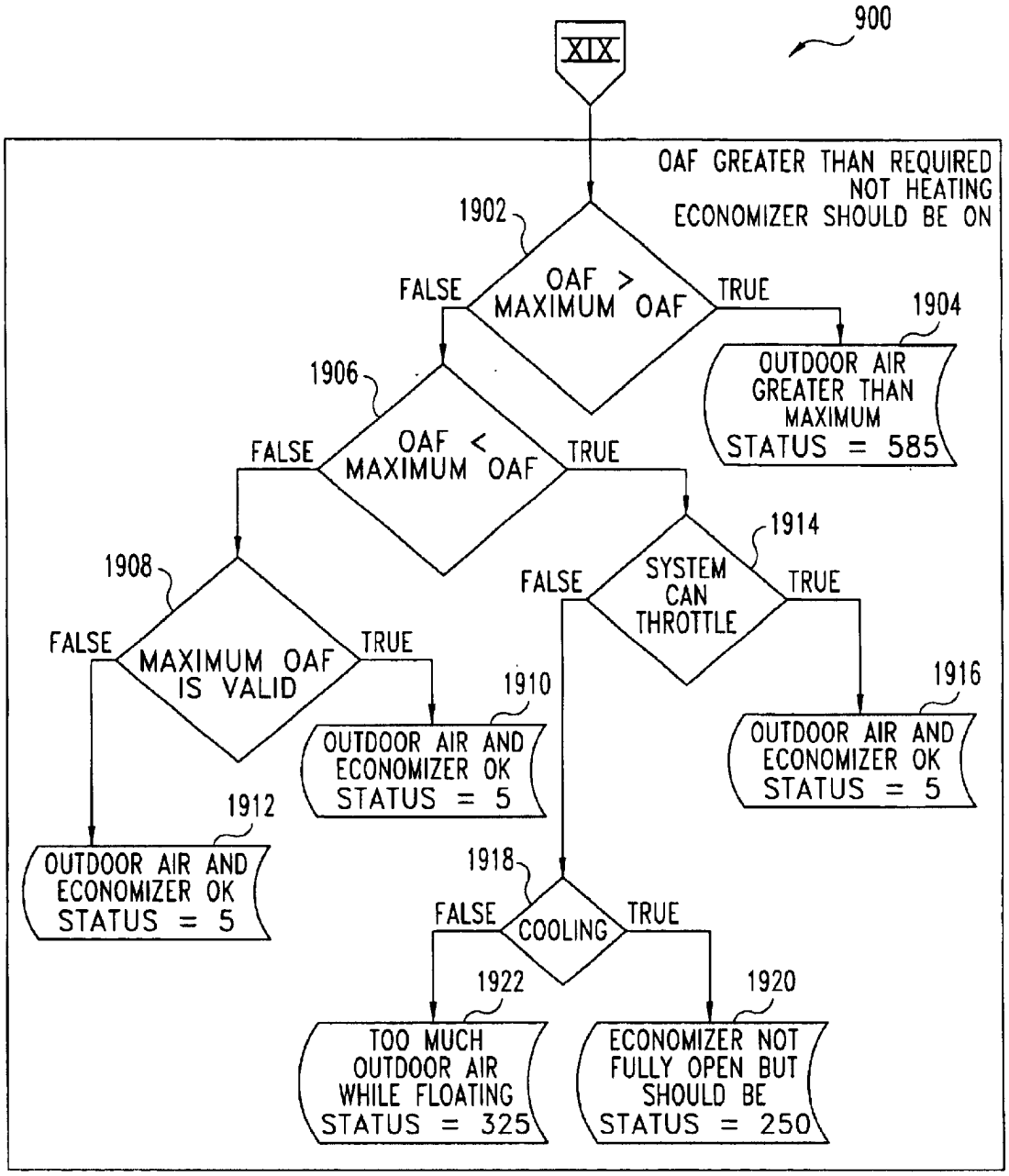
900
XIX
OAF GREATER THAN REQUIRED
NOT HEATING
ECONOMIZER SHOULD BE ON
1902
OAF > MAXIMUM OAF
FALSE
TRUE
1904
OUTDOOR AIR GREATER THAN MAXIMUM STATUS = 585
1906
OAF < MAXIMUM OAF
FALSE
TRUE
1908
MAXIMUM OAF IS VALID
FALSE
TRUE
1910
OUTDOOR AIR AND ECONOMIZER OK STATUS = 5
1912
OUTDOOR AIR AND ECONOMIZER OK STATUS = 5
1914
SYSTEM CAN THROTTLE
FALSE
TRUE
1916
OUTDOOR AIR AND ECONOMIZER OK STATUS = 5
1918
COOLING
FALSE
TRUE
1922
TOO MUCH OUTDOOR AIR WHILE FLOATING STATUS = 325
1920
ECONOMIZER NOT FULLY OPEN BUT SHOULD BE STATUS = 250

Fig. 19

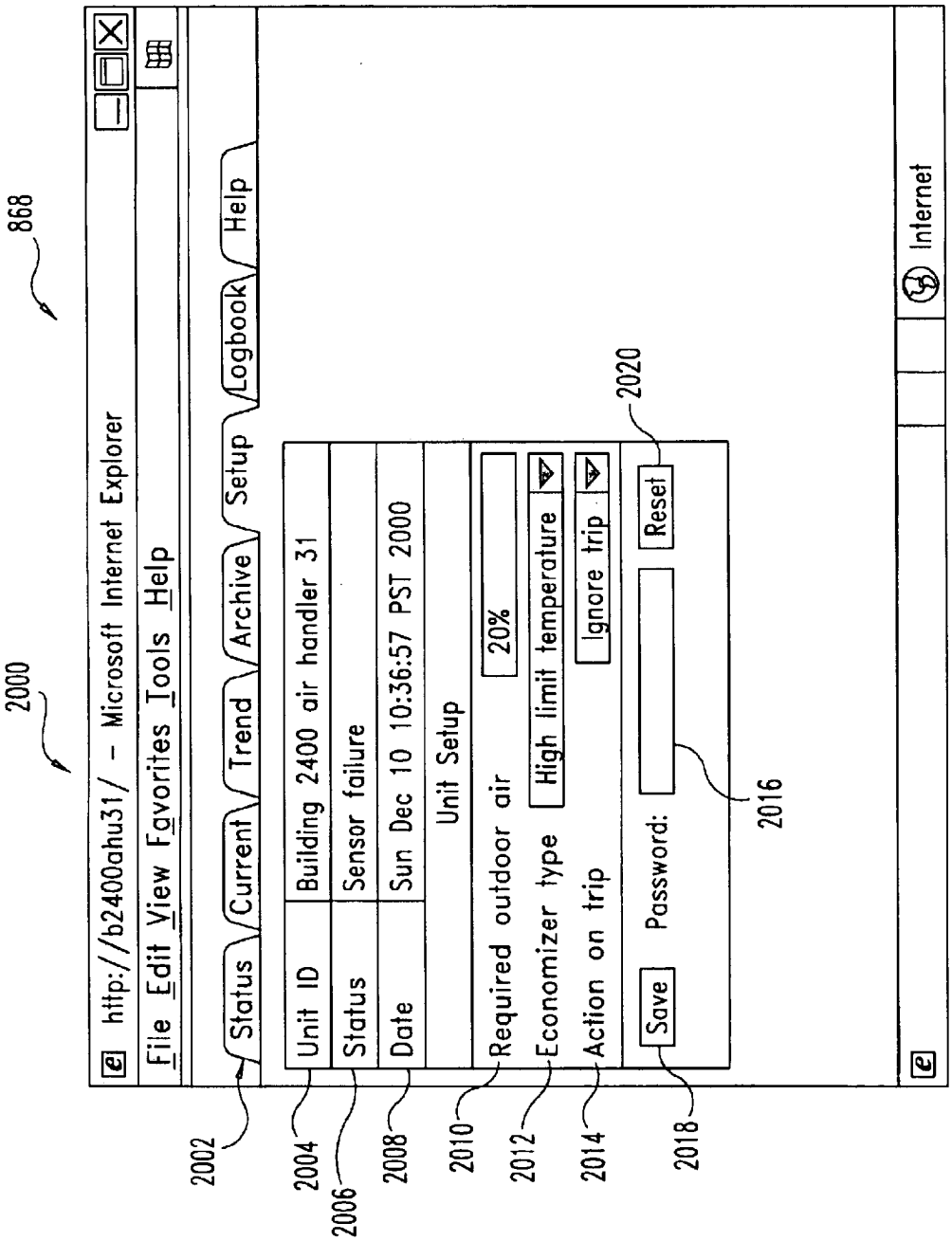
868
2000
http://b2400ahu31/ - Microsoft Internet Explorer
File Edit View Favorites Tools Help
Status
Current
Trend
Archive
Setup
Logbook
Help
Unit ID
Building 2400 air handler 31
Status
Sensor failure
Date
Sun Dec 10 10:36:57 PST 2000
Unit Setup
Required outdoor air
20%
Economizer type
High limit temperature
Action on trip
Ignore trip
Save
Password:
Reset
Internet
2002
2004
2006
2008
2010
2012
2014
2016
2018
2020

Fig. 20

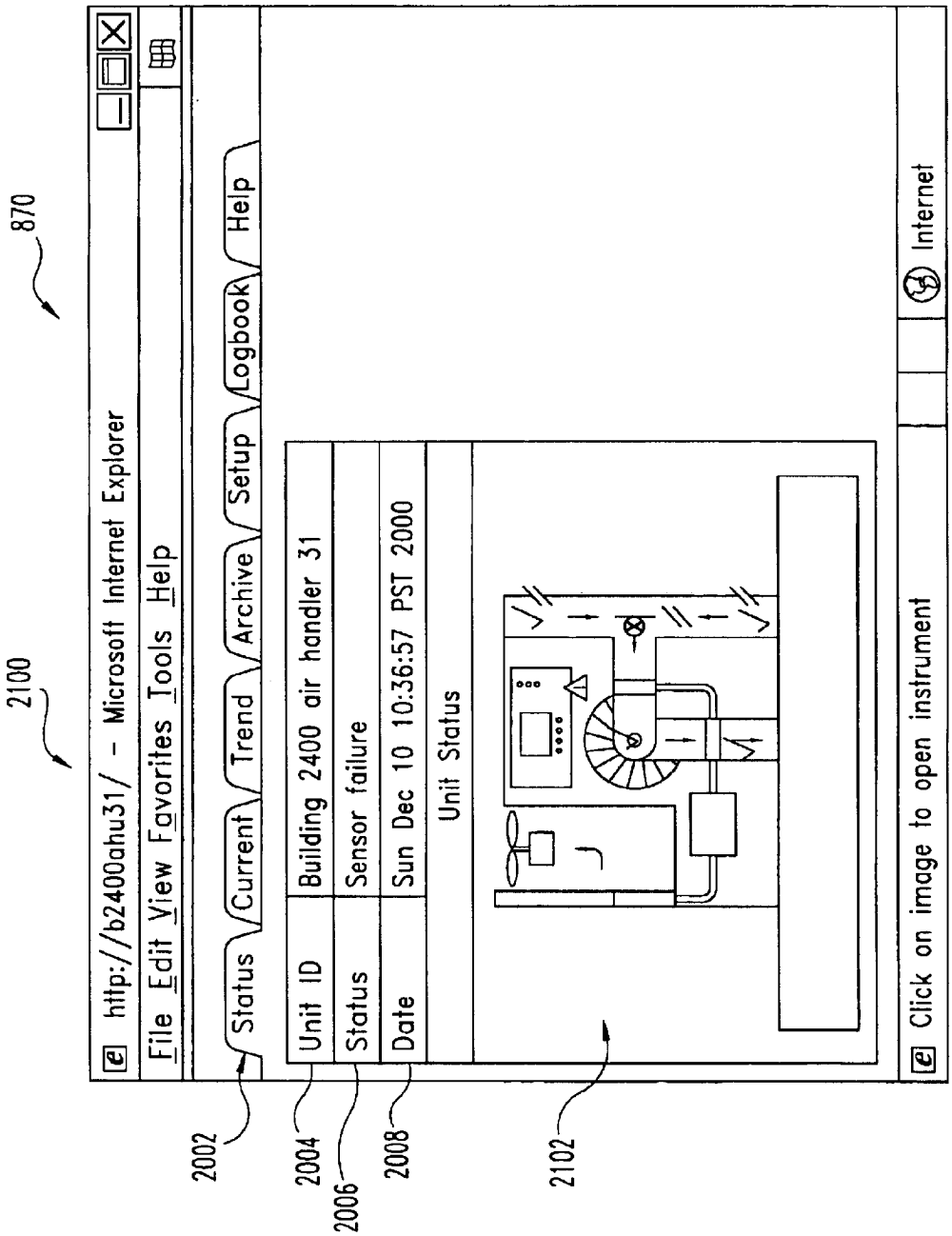
2100
870
http://b2400ahu31/ - Microsoft Internet Explorer
File Edit View Favorites Tools Help
Status
Current
Trend
Archive
Setup
Logbook
Help
Unit ID
Building 2400 air handler 31
Status
Sensor failure
Date
Sun Dec 10 10:36:57 PST 2000
Unit Status
Click on image to open instrument
Internet
2002
2004
2006
2008
2102

Fig. 21

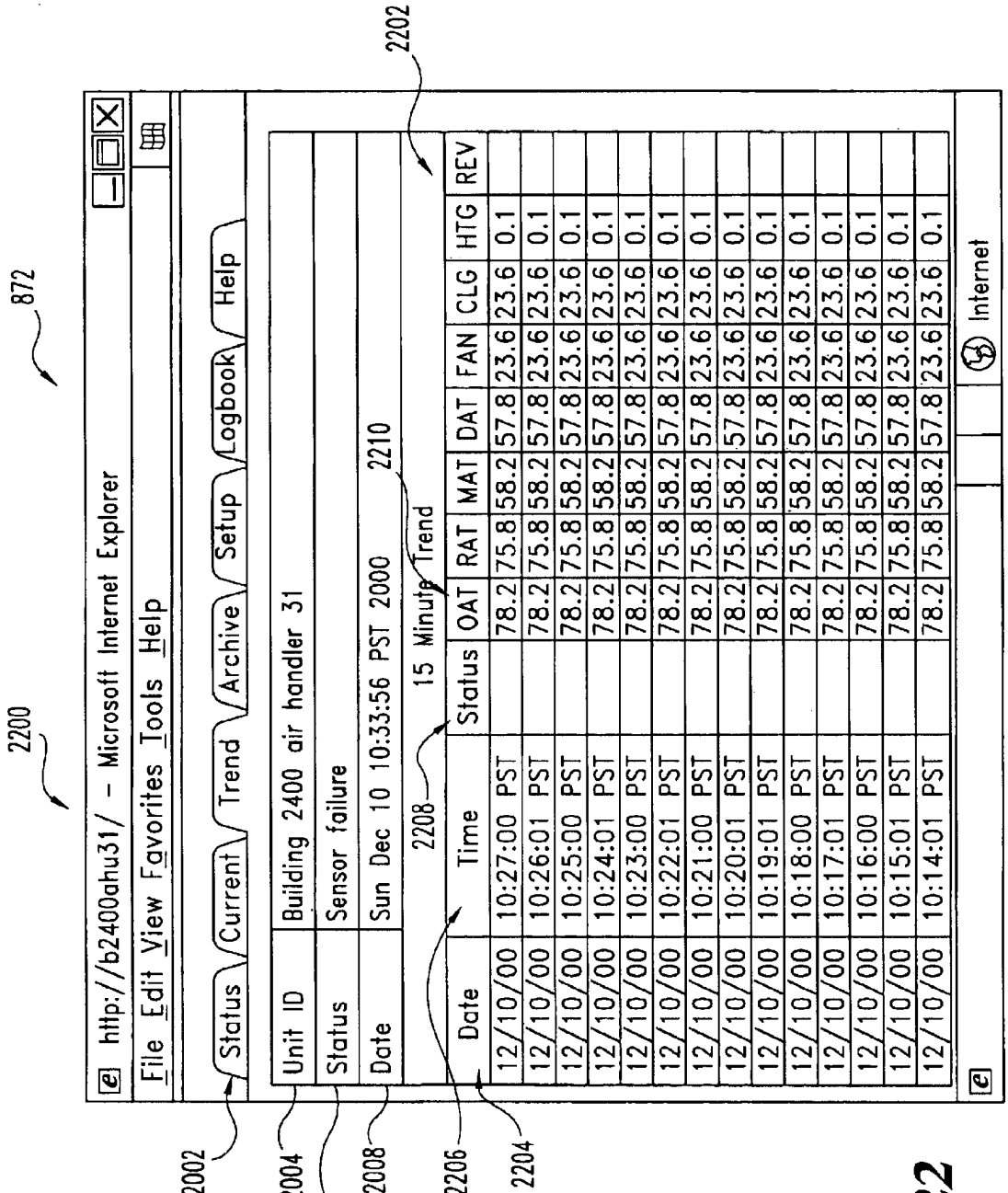

Date	Time	Status	OAT	RAT	MAT	DAT	FAN	CLG	HTG	REV
12/10/00	10:27:00 PST		78.2	75.8	58.2	57.8	23.6	23.6	0.1	
12/10/00	10:26:01 PST		78.2	75.8	58.2	57.8	23.6	23.6	0.1	
12/10/00	10:25:00 PST		78.2	75.8	58.2	57.8	23.6	23.6	0.1	
12/10/00	10:24:01 PST		78.2	75.8	58.2	57.8	23.6	23.6	0.1	
12/10/00	10:23:00 PST		78.2	75.8	58.2	57.8	23.6	23.6	0.1	
12/10/00	10:22:01 PST		78.2	75.8	58.2	57.8	23.6	23.6	0.1	
12/10/00	10:21:00 PST		78.2	75.8	58.2	57.8	23.6	23.6	0.1	
12/10/00	10:20:01 PST		78.2	75.8	58.2	57.8	23.6	23.6	0.1	
12/10/00	10:19:01 PST		78.2	75.8	58.2	57.8	23.6	23.6	0.1	
12/10/00	10:18:00 PST		78.2	75.8	58.2	57.8	23.6	23.6	0.1	
12/10/00	10:17:01 PST		78.2	75.8	58.2	57.8	23.6	23.6	0.1	
12/10/00	10:16:00 PST		78.2	75.8	58.2	57.8	23.6	23.6	0.1	
12/10/00	10:15:01 PST		78.2	75.8	58.2	57.8	23.6	23.6	0.1	
12/10/00	10:14:01 PST		78.2	75.8	58.2	57.8	23.6	23.6	0.1	

Fig. 22

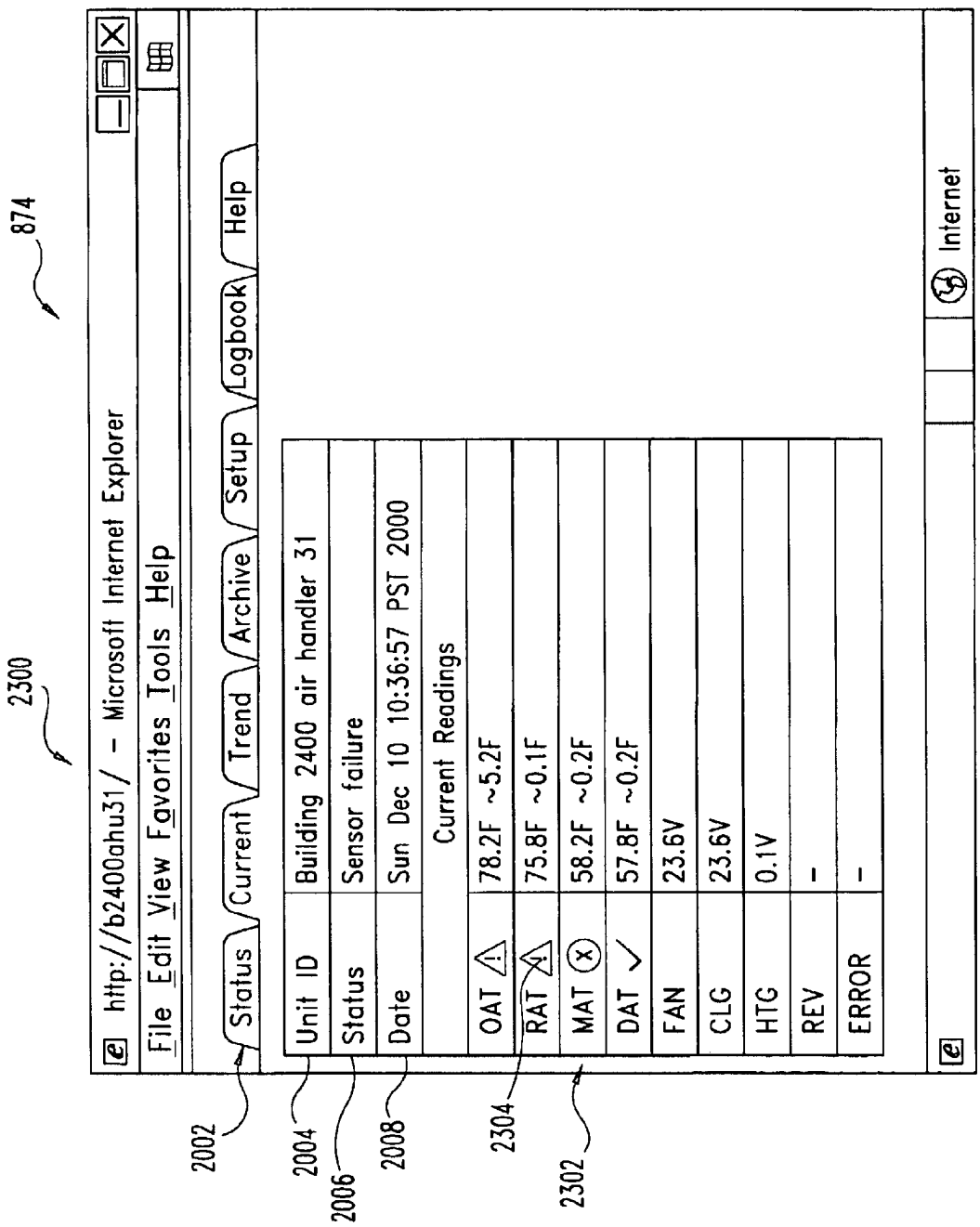
2300
874
http://b2400ahu31/ - Microsoft Internet Explorer
File Edit View Favorites Tools Help
Status
Current
Trend
Archive
Setup
Logbook
Help
Unit ID
Building 2400 air handler 31
Status
Sensor failure
Date
Sun Dec 10 10:36:57 PST 2000
Current Readings
OAT
78.2F ~5.2F
RAT
75.8F ~0.1F
MAT
58.2F ~0.2F
DAT
57.8F ~0.2F
FAN
23.6V
CLG
23.6V
HTG
0.1V
REV
-
ERROR
-
Internet
2002
2004
2006
2008
2304
2302

Fig. 23

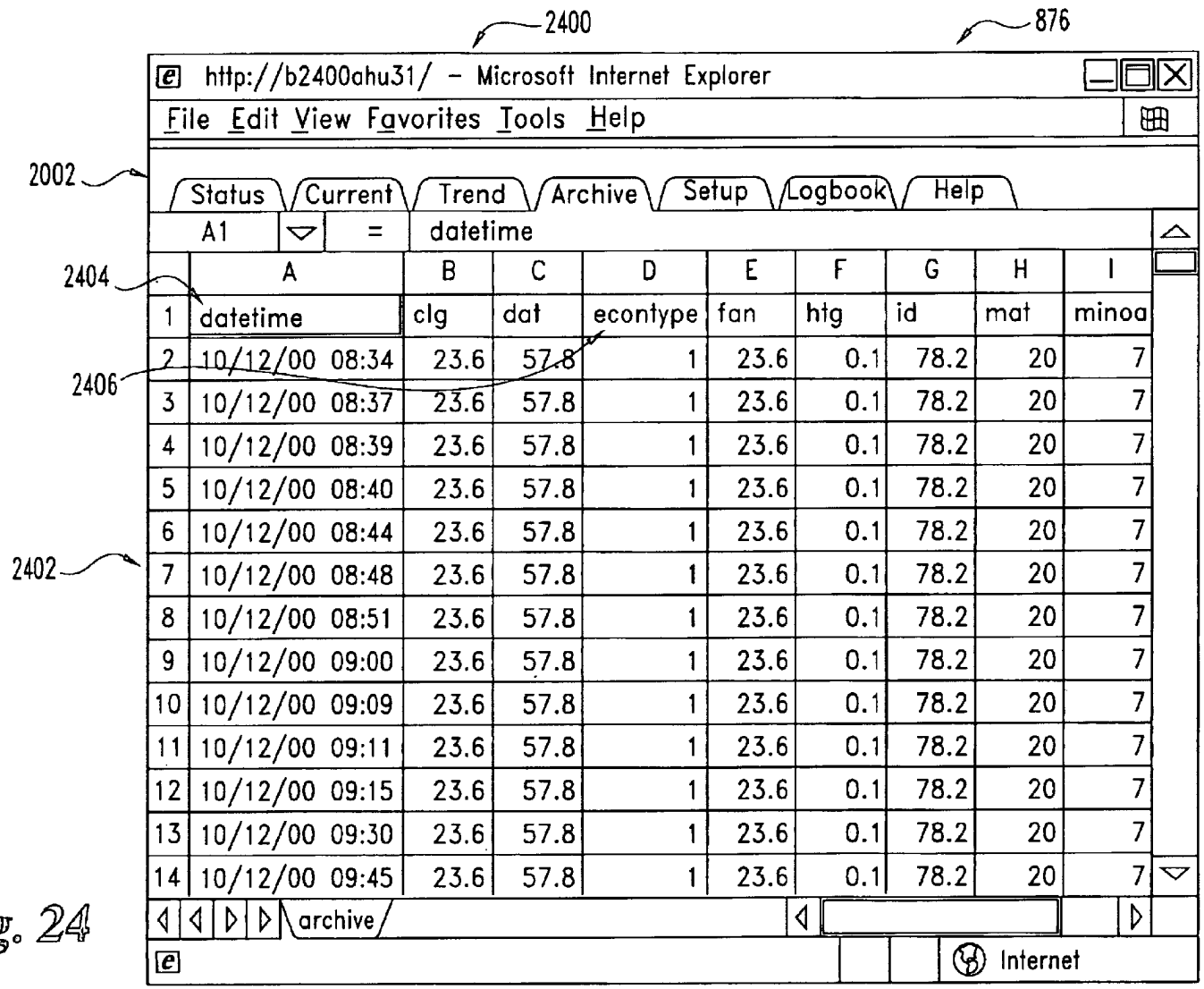

	A	B	C	D	E	F	G	H	I
1	datetime	clg	dat	econtype	fan	htg	id	mat	minoa
2	10/12/00 08:34	23.6	57.8	1	23.6	0.1	78.2	20	7
3	10/12/00 08:37	23.6	57.8	1	23.6	0.1	78.2	20	7
4	10/12/00 08:39	23.6	57.8	1	23.6	0.1	78.2	20	7
5	10/12/00 08:40	23.6	57.8	1	23.6	0.1	78.2	20	7
6	10/12/00 08:44	23.6	57.8	1	23.6	0.1	78.2	20	7
7	10/12/00 08:48	23.6	57.8	1	23.6	0.1	78.2	20	7
8	10/12/00 08:51	23.6	57.8	1	23.6	0.1	78.2	20	7
9	10/12/00 09:00	23.6	57.8	1	23.6	0.1	78.2	20	7
10	10/12/00 09:09	23.6	57.8	1	23.6	0.1	78.2	20	7
11	10/12/00 09:11	23.6	57.8	1	23.6	0.1	78.2	20	7
12	10/12/00 09:15	23.6	57.8	1	23.6	0.1	78.2	20	7
13	10/12/00 09:30	23.6	57.8	1	23.6	0.1	78.2	20	7
14	10/12/00 09:45	23.6	57.8	1	23.6	0.1	78.2	20	7

Fig. 24

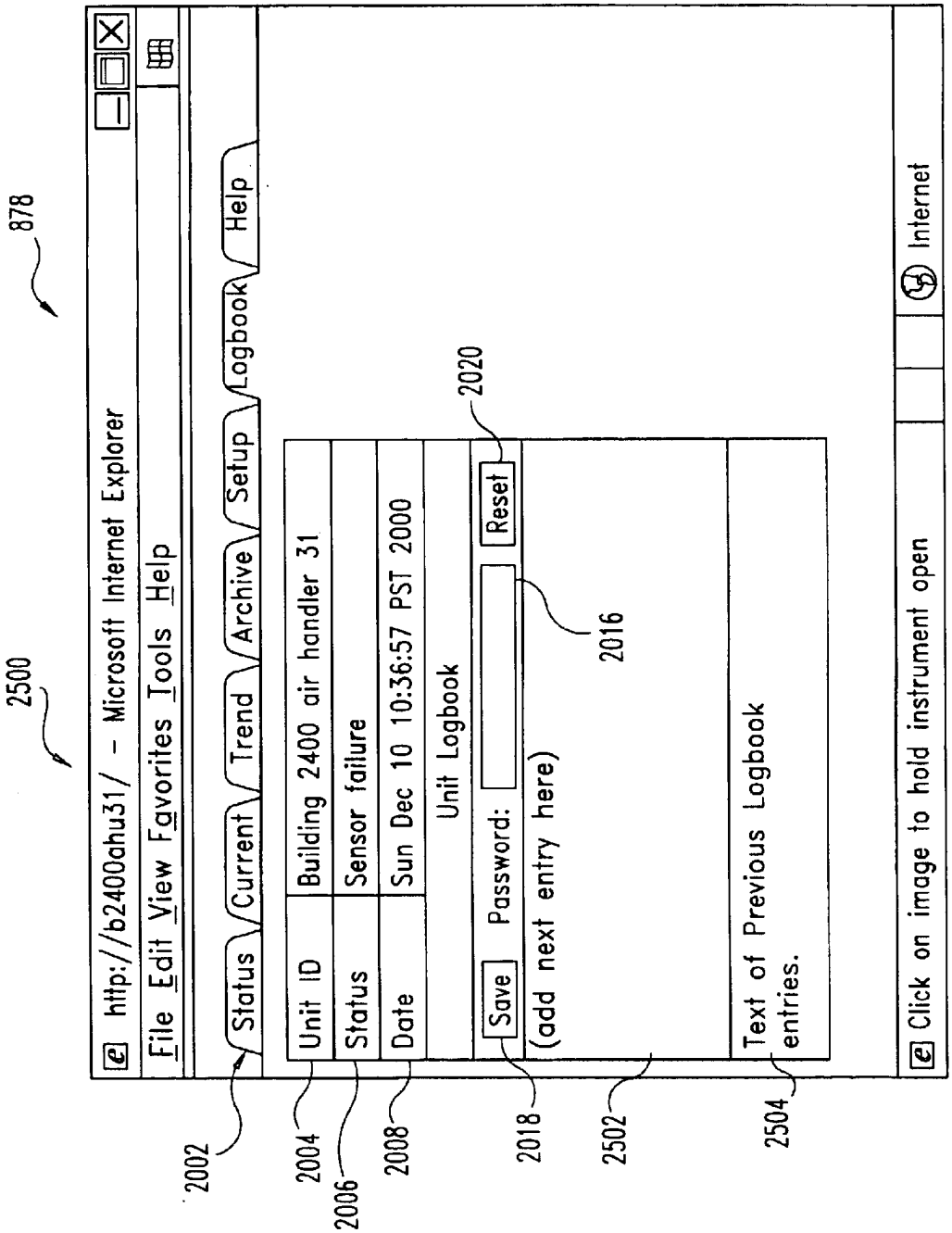
2500
878
http://b2400ahu31/ - Microsoft Internet Explorer
File Edit View Favorites Tools Help
Status
Current
Trend
Archive
Setup
Logbook
Help
Unit ID
Building 2400 air handler 31
Status
Sensor failure
Date
Sun Dec 10 10:36:57 PST 2000
Unit Logbook
Save
Password:
Reset
(add next entry here)
Text of Previous Logbook entries.
Click on image to hold instrument open
Internet
2002
2004
2006
2008
2018
2502
2504
2016
2020

Fig. 25

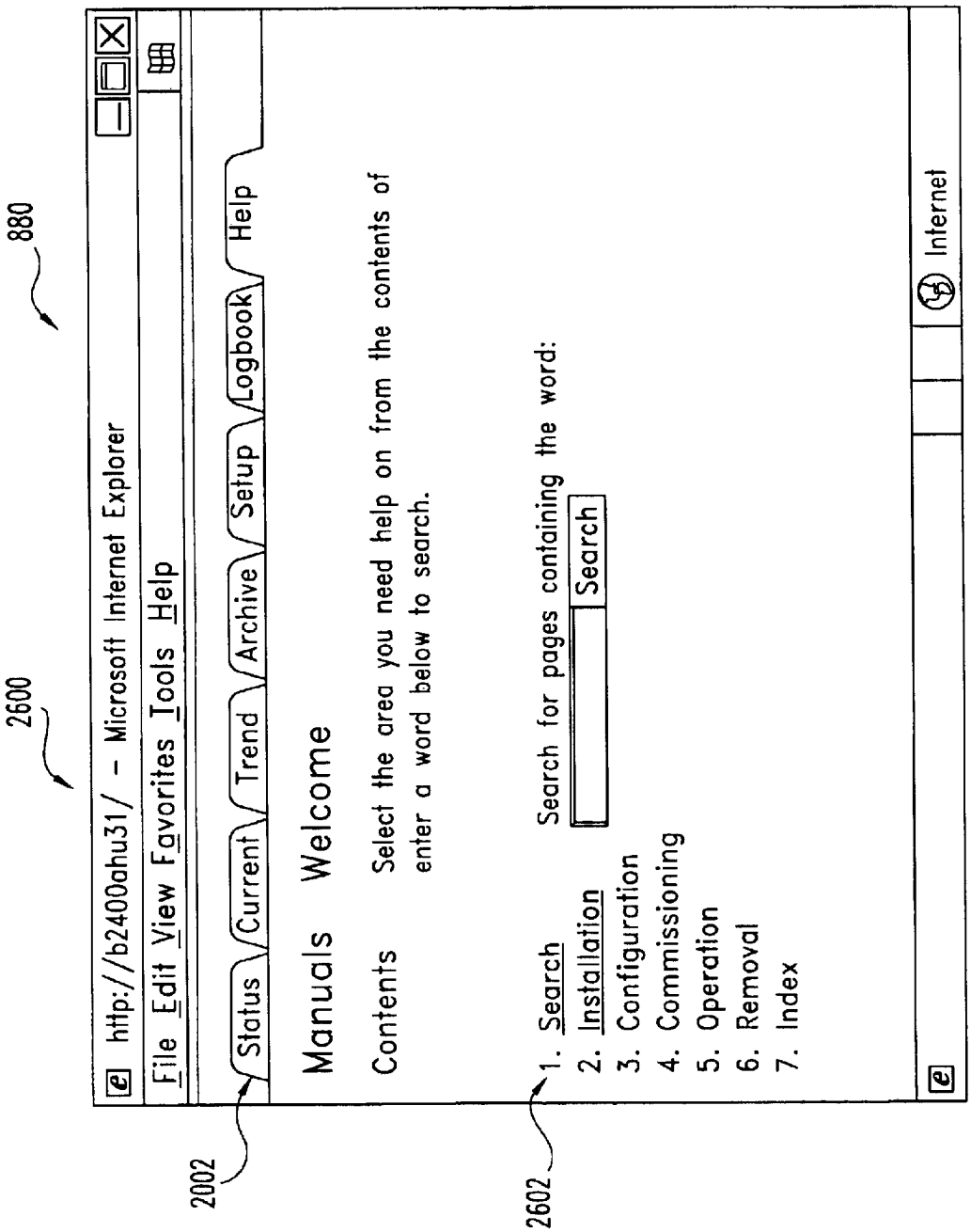
2600
880
http://b2400ahu31/ - Microsoft Internet Explorer
File Edit View Favorites Tools Help
Status
Current
Trend
Archive
Setup
Logbook
Help
2002
Manuals Welcome
Contents
Select the area you need help on from the contents of enter a word below to search.
Search for pages containing the word:
Search
2602
1. Search
2. Installation
3. Configuration
4. Commissioning
5. Operation
6. Removal
7. Index
Internet

Fig. 26

ROOFTOP PACKAGE UNIT DIAGNOSTICIAN

GOVERNMENT RIGHTS

This invention was made with Government support under Contract Number DE-AC0676RLO1830 awarded by the U.S. Department of Energy. The Government has certain rights in the invention.

BACKGROUND OF THE INVENTION

The present invention generally relates to control systems, and more specifically, but not exclusively, relates to a heating, ventilation and air conditioning (HVAC) diagnostic system that can be monitored remotely by telephone or over a computer network.

Commercial grade HVAC systems are used to control the temperature and air quality of buildings, such as in offices, hospitals and manufacturing plants. Although the reliability of such systems has improved, occasional operational failures may still arise. Even when a HVAC system appears to be outwardly operating properly, it may have an internal problem that causes it to waste energy. Many factors can make troubleshooting these systems rather difficult. For example, the complexity of the controls and other systems in HVAC systems can make troubleshooting difficult. In addition, HVAC systems are usually located in areas that are hard for service technicians to access such as on rooftops. Since technicians typically cover large service territories, a service technician may not be always available to troubleshoot sporadic problems with the HVAC system. To make the technician's job even more difficult, the HVAC sensors that are used by the technician for diagnosing problems can be unreliable and sometimes can even be the source of the HVAC malfunction. Under certain circumstances the actions of the technicians, such as opening an access panel, can make diagnosis impossible by changing the operational characteristics of the system to a large extent so as to make data collection useless.

Therefoer, there has been a need for the ability to inexpensively and accurately diagnose problems with remotely located HVAC systems.

SUMMARY OF THE INVENTION

One form of the present invention is a unique method for sensing measurements in a HVAC system. Other forms of the invention include a unique method of diagnosing HVAC problems and a unique HVAC diagnostic system.

Another form concerns a method that includes calibrating a remote sensor interface by determining one or more calibration delay times for the remote sensor interface with a processor. A first signal is sent from the processor to the remote sensor interface. In response, a second signal is received at the processor from the remote sensor interface. A delay between the sending and receiving is timed with the processor. An output level of a sensor operatively coupled to the remote sensor interface is determined, which is a function of the delay and the calibration delay times.

A further form concerns a system that includes a sensor device operable to sense a reading from a machine and a processor that is operatively coupled to the sensor device. The processor is operable to send a first signal to the sensor device and to receive a second signal from the sensor device. The sensor device is operable to delay sending the second signal in proportion to the reading. The processor includes an internal clock operable to time a time delay between

sending the first signal and receiving the second signal. The processor is operable to determine the reading from the sensor device based on the time delay.

In another form, a heating, ventilation and air conditioning unit includes a controller for controlling operation of the unit. A diagnostic device is operatively coupled to the unit, and the diagnostic device is operable to monitor status of the unit. The diagnostic device includes a processor operatively coupled to the controller, a clock operatively coupled to the processor, and one or more remote sensors attached to the unit. The remote sensors are operable to generate output voltages proportional to readings from the unit. One or more multiplexers are operatively coupled to the sensors and the processor to select one of the sensors to read. A voltage-controlled oscillator is operatively coupled to the multiplexers, and the voltage-controlled oscillator is operable to generate pulses at frequencies proportional to the output voltages from the sensors. A counter is operatively coupled to the voltage-controlled oscillator and the processor. The processor is operable to send one or more first signals to the counter. The counter is operable to send one or more second signals to the processor in response to the first signals after counting a predefined number of pulses from the voltage-controlled oscillator. The timer is operable to time delay times between sending the first signals and receiving the second signals at the processor. The processor is operable to determine the readings from the sensor devices based on the delay times. The diagnostic device is operable to determine the unit status of the unit based on the readings from the sensors and signals from the controller.

Another form concerns a method diagnosing an air treatment system with a fan. In the method, occupancy of a building is determined with a processor, and operational status of the fan is determined with the processor. The processor calculates an outdoor air fraction of the system and determines validity of the outdoor air fraction. The processor determines an outdoor air fraction status by comparing the outdoor air fraction to a required outdoor air fraction for the building. The processor determines current mode status by comparing the outdoor air fraction with current mode of operation of the system. The unit status of the system is based at least on the occupancy of the building, the operational status of the fan, the validity of the outdoor air fraction, the outdoor air fraction status, and the current mode status. Output is provided based at least in part on the unit status.

Another form concerns a system that includes means for calibrating a remote sensor interface by determining one or more calibration delay times for the remote sensor interface, means for sending a first signal to the remote sensor interface, means for receiving a second signal from the remote sensor interface in response to the first signal, and means for timing a delay time between the first and second signals. The delay time corresponds to a sensor reading. The system further includes means for determining the sensor reading based on the delay time and the calibration delay times.

Still yet another form of the present invention concerns a system that includes means for determining occupancy of a building. The building has an air treatment system with a fan. The system further includes means for determining operational status of the fan, means for calculating an outdoor air fraction of the system, means for determining validity of the outdoor air fraction, means for determining outdoor air fraction status by comparing the outdoor air fraction to a required outdoor air fraction for the building, and means for determining current mode status by compar-

ing the outdoor air fraction with current mode of operation of the system. The unit status of the system is based at least on the occupancy of the building, operational status of the fan, the validity of the outdoor air fraction, the outdoor air fraction status, and the current mode status. The system includes means for providing output based at least in part on the unit status.

BRIEF DESCRIPTION OF THE DRAWINGS

FIG. **1** shows a diagrammatic view of a monitoring system according to one embodiment of the present invention.

FIG. **2** shows a diagrammatic view of a diagnostic system in the FIG. **1** monitoring system.

FIG. **3** shows a sensor system used in the FIG. **2** diagnostic system.

FIG. **4** is a flow diagram illustrating a technique for measuring sensor readings with the FIG. **2** diagnostic system.

FIG. **5** shows a flow diagram further illustrating the FIG. **4** technique.

FIG. **6** shows a diagrammatic view of a sensor addressing system according to another embodiment of the present invention.

FIG. **7** shows a diagrammatic view of a sensor device assembly according to another embodiment of the present invention.

FIGS. **8**A–B show a diagrammatic system overview of subsystems in the diagnostic system of FIG. **2**.

FIGS. **9**–**13** and **16**–**19** show a flow diagram illustrating one technique for diagnosing the operational status of a HVAC system.

FIG. **14** shows a flow diagram illustrating one technique for determining a heating/cooling status of the HVAC system.

FIG. **15** shows a flow diagram illustrating one technique for determining an economizer mode of the HVAC system.

FIG. **20** shows a setup display screen for the system of FIG. **1**.

FIG. **21** shows a status display screen for the system of FIG. **1**.

FIG. **22** shows a trend display screen for the system of FIG. **1**.

FIG. **23** shows a current status display screen for the system of FIG. **1**.

FIG. **24** shows an archive display screen for the system of FIG. **1**.

FIG. **25** shows a log book entry display screen for the system of FIG. **1**.

FIG. **26** shows a help display screen for the system of FIG. **1**.

DESCRIPTION OF SELECTED EMBODIMENTS

For the purpose of promoting an understanding of the principles of the invention, reference will now be made to the embodiments illustrated in the drawings and specific language will be used to describe the same. It will nevertheless be understood that no limitation of the scope of the invention is thereby intended. Any alterations and further modifications in the illustrated embodiments and any further applications of the principles of the invention as described herein are contemplated as would occur to one skilled in the art to which the invention relates. One embodiment of the invention is shown in great detail, although it will be apparent to those skilled in the art that some features that are not relevant to the invention may not be shown for the sake of clarity.

A communication system **100** according to one embodiment of the present invention is illustrated in FIG. **1**. The system **100** includes a monitoring facility **102**, a remote service vehicle **104**, a computer network **106** and one or more remotely located equipment sites **108**. The monitoring facility **102** and the equipment sites **108** are operatively coupled to each other through computer network **106**. The computer network **106** can include the Internet and/or one or more other wide area networks (WANs), a local area network (LAN), a telecommunication network, a proprietary network such as provided by America Online, Inc., a combination of these and/or other types of networks generally known to those skilled in the art. Through computer terminals, personal computers and/or other types of devices at monitoring facility **102**, service technicians and other personnel can remotely monitor the operational status of multiple HVAC systems located at the different equipment sites **108**. By remotely monitoring these equipment sites **108**, technicians can be efficiently dispatched to service equipment sites **108** even before HVAC system failures occur. With the capability of remotely troubleshooting HVAC systems, technicians can properly equip themselves before travelling to the site **108**. As illustrated, the service vehicle **104**, which is used by the technician to commute to equipment site **108**, is in radio communication with the monitoring facility **102**. While the technician is commuting to (or is at) one of the equipment sites **108**, the monitoring facility **102** can relay information about the problem and equipment status to the service technician in the service vehicle **104**. It should be appreciated that the remote service vehicle **104** can be, alternatively or additionally, operatively coupled to the monitoring facility **102** through the computer network **106**.

An example of an equipment site **108** with an HVAC system **202** is depicted in FIG. **2**. The HVAC system **202** includes components that are used to control air temperature and quality, such as an air conditioner/heat pumps, auxiliary heating units, chillers, fans, duct work, controls, sensors and dampers, to name a few. The HVAC system **202** includes a controller **204** that controls the various pieces of equipment in the HVAC system, such as blower fan **206** and dampers **208**. A diagnostic system **210** according to the present invention is operatively coupled to the HVAC system **202** in order to monitor the operational status of the HVAC system **202**. To observe the operational status of the HVAC system **202**, the diagnostic system **210** has one or more sensors **212** attached to the HVAC system **202**. In one embodiment, sensors **212** are installed in the HVAC system **202** by the service technician and are separate from the sensor(s) the HVAC system **202** uses to control its own operation. Sensors **212** include an outdoor air temperature (OAT) sensor **214**, a mixed air temperature (MAT) sensor **216**, a return air temperature (RAT) sensor **218**, a discharge air temperature (DAT) sensor **220**, and a fan control (FANC) sensor **222**. By being positioned inside a make-up air area (or duct) **224** in the HVAC system **202**, the OAT sensor **214** is able to monitor the temperature of the outside air supplied to the building. The outside air is mixed with return air from the building in mixed air area **226** (before the cooling/heating coils and fan, and after the economizer damper **208**). To monitor the temperature of this mixed air, the MAT sensor **216** is positioned inside the mixed air area **226**. RAT sensor **218** is placed in return air area **228** in order to monitor the

temperature of the return air from the building. DAT sensor **220** is placed inside discharge area **230** so that the temperature of the air discharged from the HVAC system **202** is measured. FANC sensor **222** monitors the operation of blower fan **206**. The controller **204** along with the sensors **212** are operatively coupled to the diagnostic system **210** through communication pathways **232**. Information about the HVAC equipment **202** is supplied to the diagnostic system **210** through pathways **232**. In one embodiment, pathways **232** are electrically conductive wires operatively coupled between the HVAC system **202** and the diagnostic system **210**. As should be appreciated, HVAC system **202** can be operatively coupled to the diagnostic system **210** in other manners, such as through fiber optics and radio transmissions, to name a few.

The diagnostic system **210** includes an input/output (I/O) interface **234** for processing communications with the various communication pathways **232**. TRIP pathway **236** supplies to the diagnostic system **210** any information about any internal errors that may have occurred in the controller **204** of the HVAC system **202**. Reversing valve control (REVC) pathway **238** routes a signal from the controller **204** to the diagnostic system **210** to indicate the status of a reversing control valve that is used to control the heating and cooling in the HVAC system **202**. For example, the reversing control valve can be actuated so that the HVAC **202** system can either act as a heat pump or as an air conditioner. Heating control (HTGC) communication pathway **240** routes a signal from the controller **204** to indicate if a supplementary heating coil in the HVAC system **202** is operating. Cooling control (CLGC) communication pathway **242** provides a signal from the controller **204** indicating whether a supplementary cooling system has been activated in the HVAC system **202**. OAT sensor **214** is operatively coupled to the I/O interface **234** through OAT communication pathway **244**. The diagnostic system **210** receives data from the FANC sensor **222** through FANC communication pathway **246**. Further, the diagnostic system **210** receives mixed air temperature, return air temperature, and discharge air temperature data through MAT **248**, RAT **250**, and DAT **252** communication pathways, respectively.

As depicted in FIG. **2**, the diagnostic system **210** includes a processing device (processor) **254**, an internal clock **255** and memory **256**. Processor **254** can be composed of one or more components of a digital and/or analog type. Processor **254** can be operable by software and/or firmware, a hard-wired state machine, programmable logic device, or a combination of these. Processor **254** may be comprised of one or more components configured as a single unit. For a multi-component form of processor **254**, one or more components can be located remotely relative to the others. One or more components of the processor **254** may be of the electronic variety defining digital circuitry, analog circuitry, or both. Clock **255** can be incorporated into processor **254** and is operable to time various fucntions. Memory **256** can include one or more types of solid state electronic memory, magnetic memory, or optical memory, just to name a few. By way of non-limiting example, memory **256** can include solid state electronic random access memory (RAM), sequential access memory (SAM), such as first in, first out (FIFO) variety or the last in, first out (LIFO) variety, programmable readable memory (PROM), electronically programmable read only memory (EPROM), or electronically erasable programmable readable memory (EEPROM); optical disk memories (such as a DVD or CD ROM); a magnetically encoded hard disk, floppy disk, tape, or cartridge; or a combination of these memory types. In addition, memory **256** may be volatile, non-volatile, or a hybrid combination of volatile, non volatile varieties. Memory **256** includes removable memory **258** that can be removed from the processing device **210**. The diagnostic system **210** can include a personal computer, a programmable logic control unit (PLC), a personal digital assistant (PDA), and/or other types of devices generally known to those skilled in the art. In the illustrated embodiment, diagnostic system **210** is a personal computer. As illustrated, diagnostic system **210** includes an RS-232 port **260**, an RS-485 port **262**, a call unit **264**, and a LAN interface card **266**. The RS-232 port **260** is used for communicating with a terminal **268** that a technician can use to interface with the diagnostic system **210**. The RS-485 port **262** is operatively coupled to other air handling devices **270**. Call unit **264** is operatively coupled to the computer network **106** to provide an operative communication connection between the diagnostic system **210** and the monitoring facility **102**. Call unit **264** can include communication devices, such as modems, network interface cards, and/or cable modems, to name a few. In one form, the call unit **264** is a modem that communicates with the monitoring facility through a public switched telephone network (PSTN). LAN card **266** allows the diagnostic system **210** to communicate with a LAN at the equipment site **108** and/or over the computer network **106**.

FIG. **3** illustrates a communication system **300** for the I/O interface **234** according to one embodiment of the present invention. In system **300**, sensors **212** supply sensor data to the I/O interface **234**. Only OAT sensor **214** and RAT sensor **218** are shown FIG. **3** to preserve clarity. The other sensor devices **212**, such as DAT sensor **214**, FANC sensor **222**, and MAT sensor **216**, are also operatively coupled to the diagnostic system **210** in a similar manner. As should be appreciated, other types of sensors can use interface **300**.

As shown in FIG. **3**, the OAT sensor **214** and the RAT sensor **218** are operatively coupled to a multiplexer (MUX) **302**. A voltage-controlled oscillator (VCO) **304** is operatively coupled between the MUX **302** and a pulse counter **306**. In one embodiment, the MUX **302** is an ADG 706 model CMOS 2.5 ohm low volt sixteen (16) channel analog multiplexer manufactured by Analog Devices, Inc., the VCO **304** is a 74LS628 model VCO manufactured by several vendors (including, Texas Instruments), and the counter **306** is a 74LS590 model eight-bit counter manufactured by several vendors (including, Texas Instruments). An address channel **308** controls the MUX **302** so as to select one of the sensors **212** to read. Calibration line **310** in the MUX **302** is used to receive a signal to initiate calibration. Calibration Low/High line **312** is used to select which calibration level to use. VCO **304** and counter **306** both receive inputs from a strobe channel **314**. The counter **306** has a reset line **315** operatively coupled to the processor **254** for resetting the counter **306** and an output line **316** for sending an interrupt signal to the processor **254**. In the illustrated embodiment, the OAT sensor **214** and the RAT sensor **218** are thermistors in a voltage divider biased into operating condition. In one form, each sensor **212** is biased with a five (5) volt power supply. As should be appreciated, other types of sensors that can provide a variable voltage corresponding to measurements can be used. For example, sensors **212** and/or corresponding signals can include, but are not limited to, thermistors, photoresistors, potentiometers, pressure transducers, thermocouples, IR sensors, acoustic sensors, piezoelectric sensors, appropriately divided and rectified twenty-four volt AC control signals, five-volt DC active sensors, and five-volt AC current transducers.

One technique for reading measurements from the sensors **212** will now be described with reference to FIGS. **4** and **5**.

FIG. **4** contains a flow chart **400** that illustrates the technique from the perspective of the processor **254**. In stage **402**, diagnostic system **210** calibrates the I/O interface **234**. The calibration line **310** routes a calibrate signal to the MUX **302**. In one form, the calibrate Low/High line **312** is first set to a low signal in which the MUX **302** sends a low voltage signal to the VCO **304**. In one particular form, this low voltage signal is zero (0) volts. As should be understood, different voltage levels can be used to calibrate the I/O interface **234**. At the same time, the processor **254** resets the counter **306** by sending a reset signal over reset line **315**. Responding to the low calibration voltage, the VCO **302** produces an output frequency that is proportional to the low calibration voltage. The counter **306** counts the pulses produced and continues to count the pulses until a pulse limit is reached. In one embodiment, this pulse limit is 256 cycles (0–255). Once the pulse limit is reached, the counter **306** sends an interrupt signal to the processor **254**. Through clock **255**, the processor **254** is able to calculate the time delay between sending the calibration signal and receiving the interrupt signal, and this low calibration value time delay is stored in memory **256**. Afterwards, the I/O interface **234** is calibrated for a high value by setting the Low/High line **312** to high. For example, in the calibration high mode, the I/O interface **234** is calibrated for a five (5) volt signal. The counter **306** sends and interrupt when the time delay limit is reached, and the processor **254** stores in the memory **256** the time delay for the high calibration value. As should be appreciated, the system **300** can be calibrated in a different order and/or additional calibration voltages between the high and low voltage values can be used for calibration.

After calibrating the I/O interface **234**, the processor **254** in stage **404** selects one of the sensors **212** to obtain a reading. Address line **308** in the MUX **302** is used to select one of the sensors **212**. In stage **404**, the I/O interface **234** sends an address signal along address channel **308** to the MUX **302** in order to select a particular sensor **212**. For example, sending a low signal on address line **308** selects OAT sensor **214**, and sending a high signal selects RAT sensor **218**. In stage **406**, the processor **254** stores in memory **256** a start time from clock **255** and sends a strobe signal on strobe line **314** along with a reset signal on reset line **315**. The processor **254** sends the strobe signal to the VCO **304** and counter **306**. By sending the reset signal on reset line **315**, the processor **254** resets the counter **306**. Upon sensing the strobe signal, the VCO **304** starts generating pulses at a frequency proportional to the voltage from the selected sensor **212**.

FIG. **5** further illustrates this technique from the perspective of the VCO **304** and the counter **306**. As shown in FIG. **5** in stage **502**, both the VCO **304** and the counter **306** receive the strobe signal from strobe channel **314**. In response to the reset signal, the counter **306** resets to zero. After being energized with the strobe signal, the VCO **304** sends pulses to the counter **306** at a frequency proportional to the sensor voltage from MUX **302**. For example, the OAT sensor **214** in one embodiment is a thermistor, and the address channel **308** selects to measure a voltage from OAT sensor **214** that is proportional to temperature. The VCO **304** oscillates at a frequency proportional to the voltage from the OAT sensor **214**. In stage **504**, the counter **306** counts the pulses from the VCO **304**. The counter **306** continues to count the pulses until a pulse limit is reached in stage **506**. In one embodiment, this pulse limit is 256 pulses (0–255). If in stage **506** the pulse limit has not been reached, the counter **306** continues to count pulses in stage **504**. Alternatively, if the pulse limit is reached in stage **506**, the counter **306** sends an interrupt signal on output line **316** to processing device **254**. In one embodiment, the output line **316** is normally high and an interrupt is signaled by sending the output channel **316** to a low voltage.

In the meantime, the processor **254** in stage **408** has been waiting to receive an interrupt signal from the counter **306** on line **316**. While waiting in stage **408**, the processor **254** is free to perform other operations. In stage **410**, system **210** checks to see if an interrupt signal has been received. In one form, once an interrupt is received, an interrupt handler redirects operation of the processor to a specific routine. When no interrupt signal is received, the processor **254** in stage **412** determines if a sensor timeout condition has occurred. When an interrupt signal is not received within a specified time limit, the processor **254** assumes that a sensor malfunction has occurred. When the sensor timeout occurs, no time delay value is stored in memory **256** for the particular sensor **212** and the processor proceeds to stage **420**. Periodically, the processor **254** recalibrates the I/O interface **234**. The processor **254** through the clock **255** checks to see if a recalibration timeout has occurred in stage **420**. This recalibration timeout in one particular form occurs at one-minute time intervals. As should be appreciated, other time intervals can be used. If the recalibration timeout has occurred, the processor **254** in stage **402** recalibrates the I/O interface **234**. Otherwise, another sensor **212** is selected to be measured in stage **404**. In stage **412**, when a sensor timeout does not occurred, the processor **254** returns to waiting in stage **408**. In operation, when an interrupt is received, an interrupt handling function is triggered to interrupt the processor **254**. Once the interrupt signal is received in stage **410**, the processor **254** through clock **255** in stage **414** calculates the time delay between when the strobe signal was originally sent and when the interrupt signal was received. The processor **254** in stage **414** then compares the calculated time delay with the calibrated low and high time delay values that were previously stored in memory **256** (stage **402**). If the calculated time delay is outside these calibration limits, it is assumed that a sensor error has occurred and the processor **254** proceeds to stage **420** without recording the time delay for the sensor **212** in memory **256**. Otherwise, the calculated delay for the selected sensor **212** is stored in memory **256** in stage **418**, and the processor **254** determines if recalibration is required in stage **420**. When no recalibration is required, the next sensor **212** to be read is selected in stage **404**. Once the last of the sensors **212** is read, the processor **254** cycles again to the first sensor in order to continue monitoring sensor readings.

A communication system **600** for the I/O interface **234** according to another embodiment of the present invention is illustrated in FIGS. **6** and **7**. In system **600** (FIG. **6**), the I/O interface **234** is able to address a large number of sensors through use of a standard parallel port of a personal computer. The system **600** illustrated in FIG. **6** is an eight (8) channel version. Communication systems **600** with up to 2048 channels are possible on a single standard personal computer parallel port with eleven (11) output lines. The number of sensors **212** connected increases two-fold for each additional address line used. For example, using four (4) parallel ports with a total of thirty-two (32) lines permits access to over four-billion sensors. System **600** includes a strobe line (PO) **602**; address lines **604** that include address line (Data **0**) **606**, address line (Data **1**) **608**, and address line (Data **2**) **602**; and an acknowledge line (Ack) **612** on which an interrupt signal is received. The address lines **604** are used to select the sensors **212** to read. An inverter **614** is

operatively coupled to data line **606** and the output from which forms inverted data line **616**. Similarly, address line **608** has an inverter **618** operatively coupled thereto in order to form inverted line **620**. Inverter **622** is operatively coupled to data line **610** and the output from which forms inverted line **624**.

System **600** further includes a plurality of four-input AND gates **626** that are operatively coupled to address lines **604** and strobe line **602**. The AND gates **626** each have separate output lines **627** that are operatively coupled to separate sensors **212** in the manner as shown in FIG. **2**. AND gate **628** receives input from strobe line **602**, inverted line **616**, inverted line **620**, and inverted line **624**. As mentioned above, a sensor device **212** is operatively coupled to output line **630** (A**0**) from AND gate **628**. Strobe line **602**, address line **606**, inverted line **620**, and inverted line **624** are operatively coupled to AND gate one **632**. Output from AND gate **632** is sent along an output line (A**1**) **634**. As depicted, AND gate **636** receives inputs from strobe line **602**, inverted line **616**, data line **608**, and inverted line **624**. The output from AND gate **636** is sent from sensor line (A**2**) **638**. In system **600**, strobe line **602**, data line **606**, data line **608**, and inverted line **624** are operatively coupled as inputs to AND gate **640**. Output from AND gate **640** is sent along output line (A**3**) **642**. As shown, AND gate **644** receives inputs from strobe line **602**, inverted line **616**, inverted line **620**, and data line **610**. AND gate **644** has an output line (A**4**) **646**. As illustrated in FIG. **6**, AND gate **648** receives inputs from strobe line **602**, data line **606**, inverted line **620**, and data line **610**. The output from AND gate **648** is sent along data line (A**5**) **650**. Moreover, AND gate **652** receives inputs from strobe line **602**, inverted line **616**, data line **608**, and data address line **610**. The output from AND gate **652** is sent along line (A**6**) **654**. AND gate **656** receives inputs from strobe line **602**, data line **606**, data line **608**, and data line **610**. Output from AND gate **656** is sent along data line **658**.

The output data lines **627** are respectively coupled to separate sensor devices **212**. Output from these devices **212** are received on data lines **660**, **664**, **666**, **668**, **670**, **672**, **674** and **676**, which are operatively coupled together at acknowledge line **612**. Each of these lines includes a Zener diode **662** in order to isolate the individual sensors **212** from one another. Diode **678** is operatively coupled between the strobe line **602** and acknowledge line **612**. A capacitor **680**, which is operatively coupled between the acknowledge line **612** and ground, and with an addressed sensor **212** cooperate to cause a delayed rise in voltage on line **612**. The address data lines **604** select the sensor **212** to read. In operation, the data lines **604** address the particular device and strobe line **602** is energized in order to energize one of the data lines **627**. As shown in FIG. **7**, an example of a sensor device assembly **700** according to this embodiment is illustrated. It should be appreciated that only one sensor device assembly **700** is shown for the sake of clarity and that the other sensors **212** can be operatively coupled to system **600** in a similar fashion. In sensor device assembly **700**, output line **630** is operatively coupled to the OAT sensor **214**. The OAT sensor **214** in this embodiment is a voltage divider with a thermistor. The output voltage from the OAT sensor **214** is sent along output line **660**.

System **600** can selectively address and energize the sensors **212**. For example, when all of the data lines **604** are low and a strobe signal **602** is sent along line **602**, the strobe signal energizes the OAT sensor **214**. The resistance across the OAT sensor **214** along with the capacitor **680** cause a delayed rise in voltage on acknowledge line **612**. The processor **254** senses an interrupt signal on acknowledge line **612** when the voltage on line **612** reaches a specified threshold, such as five volts. Once an interrupt is sensed, the processor **254** lowers the strobe signal on strobe line **602**. The processor **254** calculates the delay time between the strobe and interrupt signals according the technique described above with reference to flow chart **400** in FIG. **4**, and the calculated time delay is stored in memory **256**.

The technique described above in FIG. **4** for monitoring sensors can be applied to other situations. In another embodiment, such sensing technique is used to monitor pump motors for cooling systems of nuclear reactors. Sensor signals in this particular arrangement come standard with a four to twenty (4–20) milliamp range as compared to the zero to five voltage range in the HVAC system **202** described above. To measure in this range, a 250-ohm resistor is placed across each of the input lines for the sensors. Other techniques also may be used to convert the four to twenty (4–20) milliamp range to zero to five (0–5) volt or one to five (1–5) volt range. Due to the potentially catostrophic results of a cooling pump failure, sensor readings for such pumps are collected in one-second time intervals. As should be appreciated, the sensor collection time intervals can vary depending on the nature of the system sensed.

FIGS. **8**A–B illustrate a representation of a data system **800** according to one embodiment of the present invention. In FIGS. **8**A–B, system **800** represents various software components (routines) and the various files stored in memory **256** through which the processor **254** processes the data from the HVAC system **202**. It should be understood that certain software components and/or files can be added, omitted and/or structured differently from the system **800** shown in FIG. **8**. The software components in the illustrated embodiment are written in C programming language. As should be appreciated, these software components can be written in other programming languages, such as Java, Basic, Fortran, Pascal, and/or an applicable assembly language to name a few. In one form, diagnostic system **210** is running a Lunix operating system. As should be appreciated, other operating systems, such as Unix, Macintosh and Windows, can be used. As illustrated in FIG. **8**A, a device driver **802** is used to receive and process the information from the I/O interface **234**. Device configuration file **804**, device script file **806**, device driver error and device error dump file **808** are stored in processes (proc) file system directory **810** in order to configure device driver **802** when diagnostic system **210** is started. Device driver **802** interfaces with the sensors **212** and generates the measured time delay values stored in memory **256** in accordance with the technique described above with reference to FIGS. **4**–**5**.

When another software component in system **800** requests a sensor reading, the device driver **802** retrieves the time delay sensors readings from memory **256** and converts the time delays to an actual reading, such as a temperature, voltage, current, distance, etc. The device driver **802** places the converted readings into character special pseudo-device files **812**. As should be appreciated, these pseudo-device files are not actual files per se. Rather, when the operating system receives a request for a particular file, device driver **802** generates and transfers to a particular location in memory **256** the requested sensor data so as to be retrieved by the requesting software component. The data stored in the particular memory location appears to the requesting software component that such a "file" is stored in memory **256**.

Before the readings are sent, the device driver **802** normalizes the time delay information in memory **256** from the sensors **212** to range on a scale from 0 to 1, and then converts

the normalized data to readings. Equation 1, below, shows how the time delay values are normalized according to one embodiment.

$$\text{Normalized Value}=(\text{Delay}-\text{Low } Cal.)/(\text{High } Cal.-\text{Low } Cal.) \quad (1)$$

As shown, the normalized reading is based on the calibrated high and low readings from stage **402**. After the time delays are normalized, the normalized time delay values are converted to sensor readings. Equation 2 below shows a polynomial equation used to convert the normalized time delay values (value) to a sensor reading for a YSI 44002 Thermistor Temperature Sensor (Yellow Springs, Inc.). Equation 3, which is shown below, converts the normalized time delays to sensor readings for a YSI 44005 Thermistor Temperature Sensor. Conversion equations for other types of sensors can be created based on linear regression analysis by comparing time delays to specific measured values. These equations can vary based on the specific characteristics of the data collection system.

$$\text{Sensor Reading YSI 44002} = 2222.6581 - 504.44169 \times value + 51.572632 \times value^2 - 2.9398314 \times value^3 + 0.099736263 \times value^4 - 0.002007175 \times value^5 + 2.21574 \times 10^{-5} \times value^6 - 1.03508 \times 10^{-7} \times value^7 \quad (2)$$

$$\text{Sensor Reading YSI 44005} = 70.89188173 - 626.31320278 \times value + 3952.513159 \times value^2 - 16733.05862 \times value^3 + 42423.82688 \times value^4 - 62410.07287 \times value^5 + 48919.3399 \times value^6 - 15781.3068 \times value^7 \quad (3)$$

After the time delay values are converted to readings, the device driver **802** calculates statistical information about the sensor readings, such as the mean and standard deviation. When a software component requests sensor readings, the device driver **802** outputs the readings along with the statistical information as pseudo-device files (channels) **812**. By having these various channels **812** as character special pseudo-device files, information in the channels **812** can be easily ported to other applications. In the illustrated embodiment, these channels **812** are formatted in the extensible mark-up language (XML) such that particular information is "tagged". Table 1, which is shown below, provides an example of how such data can be formatted within XML. The objects in Table 1 can be stored in a single XML file and/or in separate XML files. In one embodiment, sensor information is stored in the various channels **812** based on the sensor object type, and trending information is stored using the trend object type (in trend log **826**). Error and log information are respectively stored using the error and log object types. In this embodiment, diagnostic information is stored in memory **256** (unit status file **834**) using the diagnosis object type of Table 1.

TABLE 1

Object Type	Part	Subpart	Description
Sensor	All Sensor values resented		
	Token		Sensor name
	Value		Sensor reading as a median of the samples collected.

TABLE 1-continued

Object Type	Part	Subpart	Description
	Attributes	Sensor information.	
		Status	Sensor status: 0 = void, 1 = valid, 2 = invalid.
		Unit	Sensor reading units (e.g., "F", "kWh", "%")
		Stdev	Sensor reading standard deviation.
		Slope	Sensor reading slope (e.g., F/s, kWh/s, %/s)
		Skew	Sensor reading skew (expressed as a fraction of high stdev to low stdev, e.g., >1 is high stdev > low stdev)
		Samples	Number of samples used to calculate the average, stdev, skew, min, and max.
		Min	The minimum reading seen.
		Max	The maximum reading seen.
		Mean	The average of samples collected.
		Span	Time in seconds between when first and last samples were collected.
		Age	Time in seconds since last sample was collected.
		Msg	A test message corresponds to a diagnosis of the sensor's status.
Trend	Token	Trend	Indicates trend log follows.
	Value	Log	Log entry embedded (repeated many times).
	Attributes	(None)	
Log	Token	Log	Indicates log entry follows.
	Value	Date	Date of log entry.
		Time	Time of log entry.
		(Varies)	Various values known at date/time of log entry.
Error	Token	Log	Indicates trip/error message follows.
	Value	(Text)	Message indicating nature of trip/error.
	Attributes	Date	Date of message.
		Time	Time of message.
Diagnosis	Token	State	System state entry follows.
	Value	(test)	Message describing state.
	Attributes	Status	Indicates whether the state is valid, invalid or unknown.
		Code	Indicates the status code number.

As can be seen above, the sensor can be subdivided into its sensor name (token), the average reading from the samples collected (value), and particular attributes. These attributes include the sensor status, the units being measured (unit), standard deviation of sensor readings (stdev), the reading slope (slope), a skew in the sensor readings (skew), the number of samples to calculate the average value (samples), the minimum reading (min), the maximum reading (max), the mean (mean), the time span between samples (span), the age of the last sample (age) and a text message corresponding to diagnosis of the sensor's status (msg). In one embodiment, the standard deviation, mean value and the other statistical values are calculated for the last sixty-four measurements. It should be appreciated, however, that other sample sizes can be used to calculate these statistics. Each of the channels **812** shown in FIGS. **8**A–B represent the pseudo-device files for the individual sensor readings. In one embodiment, channel **813**, channel **814**, channel **815**, channel **816**, channel **817**, channel **818**, channel **819**, and channel **820**, respectively, represent sensor readings for OAT sensor **214**, RAT sensor **218**, MAT sensor **216**, DAT sensor **220**, FANC sensor **222**, CLGC line **242**, HTGC line **240**, and REVC line **238**. As should be appreciated, certain channels **812** can be omitted and other types of sensor readings can be contained in these channel files **812**.

As illustrated in FIG. **8**B, the web data directory **822** is structured by the operating system to appear to include the channels **812**. Trending system **824** collects the sensor information from the channels **812**, which are located in the

web data directory **822**, and develops a trend of the data at one-minute intervals for the most recent fifteen minutes. This trend data is stored as a trend log **826** in the web data directory **822**. In one form, the trend data is stored in an XML file format (see Table 1 for an example). An archival system **828** periodically collects sample trending data from the trending system **824** for permanent storage in permanent archive **830**, which is also stored within the web directory **822**. In one form, the archive file **830** is formatted as a comma-separated value file within the web data directory **822**. It should be appreciated that the permanent archive can be stored in other formats, such as an XML, HTML, or in database file format. Outdoor Air/Economizer (OA/E) Diagnostician **832** periodically determines if the HVAC system **202** is properly running by reviewing the readings in channels **812**. The diagnostician **832** stores the current status of the HVAC system **202** in unit status file **834**, which is located in the web data directory **822**. In one form, the unit status data is stored in an XML file format (see Table 1 for one example). As should be understood, the unit status file **834** can be formatted differently.

In order to schedule periodic operation of the subsystems **824**, **828** and **832**, system **800** has an operating system that utilizes a cron daemon **836**. When the system **800** is started (booted), DX cron-configuration file **838** modifies the cron utility file (crontab) in order to designate when to periodically run the trending system **824**, archival system **828**, and diagnostician **832**. The cron daemon **836** periodically runs the systems **824**, **828** and **832** based on the time periods specified in the cron utility file **840**. As should be appreciated, depending on the operating system used, different scheduling utilities can be used to schedule these subsystems. In one embodiment, the diagnostician **832** runs every minute, the trending system **824** runs every minute and the archival system runs every fifteen-minutes. In another embodiment, the diagnostician **832** runs every second. As should be appreciated, these subsystems can run at different time intervals than those described herein.

DX script configuration **842** is used by script processor **844** to generate configuration files **846** that are used by the diagnostician **832** for determining whether or not the HVAC system **202** is operating properly. In one embodiment, the DX configuration files **846** include an economizer type file (ECONTYPE) that specifies if and what type of economizer is being used in the HVAC system **202**. Economizers are used by HVAC systems to reduce the amount of energy required to heat or cool a building by mixing outside air with return air in order to adjust the discharge air temperature. In a "high-limit" type economizer, the economizer is disabled so that outdoor air is not drawn into the building when the temperature exceeds a specified high temperature limit. With this type of economizer, DX configuration files **846** include a high limit file that specifies the high temperature limit. For example, the HVAC system **202** may not take in any outside air when the temperature is above 75° F. In a "differential" type economizer, the economizer is disabled when the difference between the outside and inside temperature comes within a specified differential limit. For both the high-low and differential type economizers, a "deadband" tolerance is used for comparing outdoor air and return air temperatures. The DX configuration files **846** for a differential type economizer can include files that specify differential parameters, such as the dead-band temperature. In one embodiment, the differential temperature is 5° F. For both economizer types, other temperature ranges may be used. An occupied basis file (OCCBASIS), which indicates how building occupancy is determined, can also be one of the DX configuration files **846**. DX configuration files **846** can also include a minimum (MINOAF), required (REQOAF) and maximum (MAXOAF) outdoor air fraction files that specify the proportion of outdoor that the HVAC system **202** can use. The outdoor air fraction (OAF) is the proportion of outside air that is mixed with the indoor air.

The diagnostician **832** uses the information contained in the DX configuration files **846** along with the sensor information from channels **812** to determine the operational status of the HVAC system **202**. The diagnostician **832** retrieves the sensor data in channels **812** by sending a request for these "files" to the operating system. The operating routes this request to the device driver **802** which in turn generates the pseudo-device files **812** that responds to this request. The diagnostician **832** then analyzes the sensor data and stores in memory **256** the status of the HVAC system **202** in unit status file **834**. Below in Table 2 are examples of condition status code numbers along with corresponding descriptions of the conditions. As should be appreciated, other types of status indicators and/or descriptions can be used to indicate the status of the HVAC system **202**.

TABLE 2

Conditions Detected	
Condition #	Description
Diagnostician failure	
−1	Internal diagnostician error
Operation ok	
0	Zero outdoor-air ventilation is OK when the building is unoccupied
1	Outdoor-air ventilation is OK
5	Outdoor-air ventilation and economizer operation are OK
Incomplete diagnosis	
19	Outdoor-air ventilation is OK, but cannot verify economizer operation
70	Unable to check outdoor air because fan status signal is missing
71	Outdoor-air ventilation as required, but unable to determine heating or cooling mode
72	Return, mixed, or outdoor air temperature sensor failure
73	Return, mixed, or outdoor air temperature signal lost
89	Unable to verify economizer operation because required outdoor air supply cannot be compared to required (which may be missing)
92	Unable to determine outdoor air supply because outdoor air temperature is too close to return air temperature
Low ventilation problems	
100	No outdoor-air ventilation is being supplied
130	Inadequate outdoor-air ventilation is being supplied
Low economizer problem	
200	The economizer should be operating, but instead it is off
250	The economizer should be operating fully open, but it is only partially open
High ventilation problem	
300	Too much outdoor-air ventilation is being provided during the heating mode
310	Too much outdoor-air ventilation is being provided during the cooling mode

TABLE 2-continued

Conditions Detected	
Condition #	Description
325	Too much outdoor-air ventilation is being provided during the floating (not heating or cooling) mode
330	Too much outdoor-air ventilation is being provided
Control or other problems	
580	Outdoor-air ventilation is less than the minimum
585	Outdoor-air ventilation is greater than the maximum
Control or other problems that waste energy	
650	This air handler's heating and cooling are on simultaneously

A technique the diagnostician **832** uses for determining the operational status of the HVAC system **202** will now be described with reference to FIGS. **9–19**. A flow diagram **900** beginning in FIG. **9** illustrates this technique the processor **254** uses for diagnosing the operational status of the HVAC system **202**. The status numbers (codes), which are shown in flow chart **900**, are shown for explanation purposes only, and it is not the intent that the present invention be limited to the specific status codes displayed therein. As should be appreciated, the flow chart **900** can be modified to include additional subroutines and/or exclude certain illustrated subroutines for determining the operational status of the HVAC system **202**. After beginning (stage **902**), a default conditional status of the HVAC system **202** is set to an internal error status=−1. This ensures that if an interruption and/or error occurs in the processor **254** during the illustrated technique, an internal error status indicator for the diagnostician **832** will be stored in unit status file **834**. In stage **906**, the diagnostician **832** determines through channel four (FANC) **817** if the fan **206** is operating. If the fan **206** is not operating, then the diagnostician in stage **1002** determines if fan operation is used as a basis for determining building occupancy (FIG. **10**).

The diagnostician **832** can determine building occupancy in a number of ways. One way, among others, is to check fan **206** operation. When the fan **206** is operating, the diagnostician **832** assumes the building occupied, and the diagnostician **832** assumes the building is unoccupied when the fan is not operating. Another way to check occupancy, is through maintenance of a building occupancy schedule in memory **256**. The diagnostician **832** can check this schedule in order to determine if the building is occupied. To determine the manner in which occupancy is resolved, such as through fan operation or occupancy schedule, the diagnostician **832** in stage **1002** retrieves the occupied basis information from the DX configuration files **846**. As previously mentioned, the DX configuration files **846** includes a building occupied basis file (OCCBASIS) that indicates how to determine occupancy. For example, the OCCBASIS file can contain a flag that equals zero (0) to indicate that fan operation is used to determine occupancy and that equals one (1) to indicate that the occupancy scheduling should be used. In the illustrated embodiment, fan operation is used to determine occupancy. In stage **1002**, the diagnostician **832** determines if fan operation is used as a basis for determining occupancy (OCCBASIS=0). When fan operation is not used as a basis, in stage **1004**, the diagnostician **832** returns a no outdoor air supply status error (status=100) and stores this status in unit status file **834**. It should be appreciated that stage **1004** can be expanded to include additional stages for determining building occupancy in other manners, such as through occupancy scheduling. In stage **1006**, when fan operation is used as a basis to determine building occupancy, the diagnostician **832** determines whether the fan control signal received from the FANC sensor **222** is valid or not. When the building is unoccupied, the fan **206** does not operate and no outdoor air needs to be supplied to the building. When the signal from the FANC sensor **222** is valid, the diagnostician **832** stores in unit status file **834** a status indicating that no outdoor air is acceptable when the building is unoccupied (status=0) in stage **1008**. Otherwise, if the signal from the fan control sensor **222** is not valid (i.e., the sensor is damaged), then a non-valid fan signal status (status=70) is stored in the unit status file **834** in stage **1010**.

Referring again to stage **906** in FIG. **9**, if the fan **206** is on, then the diagnostician **832** calculates the outdoor air fraction (OAF). In one embodiment, as shown in equation 4 below, the outdoor air fraction is based on the mixed air temperature (MAT), the return air temperature (RAT), and the outdoor air temperature (OAT).

$$OAF = \frac{(MAT - RAT)}{(OAT - RAT)} \tag{4}$$

By having the device driver **802** generate the channels **812**, the diagnostician **832** is able to retrieve the mixed air temperature from the MAT sensor **216**, the return air temperature from the RAT sensor **218**, and the outdoor air temperature from the OAT sensor **214**. If the calculated OAF in stage **910** is invalid, then the diagnostician **832** determines whether the MAT, RAT or OAT is invalid in stage **912**. When the MAT, RAT and OAT values are valid, the diagnostician **832** changes the unit status file **834** to indicate that the temperatures are too close to check the outdoor air (status=92) in stage **914**. Otherwise, if any of the temperature readings in stage **912** are invalid, a temperature sensor failure status (status=72) is recorded in unit status file **834** in stage **916**. In stage **910**, when the diagnostician **832** determines that the OAF is a valid value, the diagnostician **832** in stage **918** determines whether the OAF value is not void. If the calculated OAF value is void, the diagnostician **832** in stage **920** stores a "temperature signal lost" code (status=73) in the unit status file **834**.

As depicted in FIG. **11**, if the calculated OAF value is not void, then the diagnostician **832** in stage **1102** determines whether the OAF is less than the minimum OAF, which is stored in the DX configuration files **846**. When the OAF is less than the minimum OAF, the diagnostician **832** records in unit status file **834** that the outdoor air ventilation is less than the minimum limit (status=580) in stage **1104**. When the processor **254** through diagnostician **832** determines that the OAF is not less than the minimum OAF, then the processor **254** in stage **1106** determines whether the OAF is less than the required OAF for the equipment site **108**. The diagnostician **832** obtains this required OAF information from the DX configuration files **846**. When the OAF is less than the required OAF, the diagnostician **832** reports in the unit status file **834** that there is a low outdoor air supply in stage **1108** (status=130).

In FIG. **12**, when the OAF is not less than the required OAF, the processor **254** through diagnostician **832** then determines if the calculated OAF value is greater than the required OAF in stage **1202**. When the OAF is not greater than the required OAF, in stage **1204** the diagnostician **832**

determines whether the required OAF is a valid number. The required OAF value may be invalid for a number of reasons. For example, the required OAF may be invalid due to data corruption in the DX configuration files **834** or due to the required OAF not being entered. If the required OAF is invalid, then the diagnostician **832** reports in stage **1206** that the required outdoor air supply (required OAF) is missing and therefore the economizer was not checked (status=89).

When in stage **1204** the required OAF is valid, the diagnostician **832** next determines the heating/cooling (H/C) status of the HVAC system **1202** in stage **1302** (FIG. **13**). A flow chart **1400** illustrating a subroutine for determining the H/C status of the HVAC system **202** is illustrated in FIG. **14**. Table 3 below provides an exemplary descriptive guide for the different heating H/C statuses in the H/C subroutine.

TABLE 3

H/C Status Number	Description
0	Neither Heating nor Cooling
1	Cooling
2	Heating
3	Heating and Cooling

As shown above, when the H/C status is zero (0), the HVAC system **202** is neither heating nor cooling. When the H/C status is one (1), the system **202** is cooling, and the system **202** is heating when the H/C status is two (2). A H/C status of three (3) symbolizes that the HVAC system **202** is both heating and cooling. As should be appreciated, different schemes can be used to symbolize the different H/C statuses of the HVAC system **202**. In stage **1402**, the diagnostician **832** begins H/C status subroutine. Next, in stage **1404**, the H/C status, which is stored in memory **256**, is cleared by setting the H/C status to zero (0). The diagnostician **832** in stage **1404** determines if the HVAC system **202** is in a heating mode.

As shown in FIG. **2**, the controller **204** sends a high signal on the HTGC line **240** when the supplemental heating coils in the HVAC system **202** are heating. Controller **204** uses the reversing control (REVC) valve to control if the HVAC system **202** is in an air conditioning or a heat pump mode. The signal from the REVC line **238** is high (i.e., 1) when the controller has the REVC valve of the heat pump set to cooling mode. The controller **204** sends a high signal on the CLGC line **242** when the HVAC **202** is enabling the compressor of the air conditioner or heat pump.

When the heating control signal from the HTGC sensor **240** is high (greater than zero) in stage **1406**, the H/C status is set to equal two (heating) in stage **1408**. Alternatively, in stage **1406**, if the reverse control signal REVC sensor **238** is not high and the cooling control signal from the CLGC sensor **242** is high, then the H/C status is set to two (heating) in stage **1408**. If the conditions in stage **1406** are false, the diagnostician **832** in stage **1410** then checks to see if the HVAC system **202** is heating by comparing the discharge air temperature with the mixed air temperature. If the discharge air temperature supplied to the building, as measured by the DAT sensor **220**, is greater (hotter) than the mixed air temperature from MAT sensor **216** plus a temperature differential, in this case 5° F., then the H/C status is set to two (heating) in stage **1408**. Otherwise, in stage **1412**, the diagnostician **832** checks to see if the sensor information in channel three **816** from the DAT sensor **220** is valid. When the DAT sensor **220** sends an invalid signal, then the H/C status in stage **1414** is set to "invalid". Otherwise, the H/C status is not changed in stage **1412**.

After stages **1408**, **1412** and **1414** diagnostician **832**, then checks to see if the HVAC system **202** is in a cooling mode in stage **1416**. If the reversing control valve as indicated by REVC line **238** is active (high) and the cooling control signal as indicated by CLGC line **242** is high, the H/C status is increased by one (1) in stage **1418**. For example, if the H/C status is still zero before stage **1416** (neither heating nor cooling) and the condition in stage **1416** is satisfied, the H/C status will be increased to one (1) so as to indicate the HVAC system **202** is in a cooling mode. In another example, if the H/C status was set to two (2), heating, in stage **1408** and the conditions in stage **1416** are satisfied, then the status is increased to three (3) so as to indicate that the HVAC system **202** is both heating and cooling in stage **1418**. When conditions in stage **1416** are false, the diagnostician **832** then checks to see if the discharge air temperature is cooler than a certain amount below the mixed air temperature, in this case 5° F., in stage **1420**. If the discharge air temperature as sensed by DAT sensor **220** is less than 5° F. below the mixed air temperature, as sensed by MAT sensor **216**, then the diagnostician **832** adds one to the H/C status in stage **1418**. Otherwise, in stage **1422** the diagnostician **832** checks to see if the sensor information from the DAT sensor **220** is valid. If the discharge air temperature sensor reading is invalid then the H/C status in stage **1424** is changed to invalid. Otherwise, the H/C status is not changed in stage **1422**. Following stages **1418**, **1422**, and **1424**, the H/C status in stage **1426** is returned to the requesting routine. As should be appreciated, other H/C status indicators can be returned. For example, the diagnostician **832** can check for temperature reading and control signal inconsistencies in order to detect sensor and/or control errors. Such errors then can be indicated by the H/C status.

As illustrated in FIG. **13**, after determining the H/C status in stage **1302**, the diagnostician **832** in FIG. **13** then determines if the HVAC system **202** is heating and cooling at the same time (H/C status=3). If simultaneous heating/cooling is occurring, then in stage **1306** the diagnostician **832** reports in the unit status file **834** that simultaneous heating/cooling is occurring (status=650). When the HVAC system **202** is not heating and cooling at the same time, the diagnostician **832** in stage **1308** then retrieves the economized type information from the DX configuration files **846** in stage **1308**. For example, the economizer type can equal zero (0) to indicate that no economizer is in use, equal to one (1) when a high limit economizer is in use and equal to two (2) when a differential economizer is in use. The diagnostician **832** then checks in stage **1310** whether or not an economizer is in use (i.e., economizer type=0). When an economizer is not in use, in stage **1312** an outdoor ventilation is acceptable status (status=1) is recorded in the unit status file **834**. If the HVAC system **202** is using an economizer, then the diagnostician **832** checks to see whether or not the HVAC system **202** is in a cooling mode (H/C status=1) in stage **1312**. If not, the diagnostician **832** in stage **1314** checks to see if the HVAC system **202** is in a heating mode (H/C status=2). In stage **1316**, when the HVAC system **202** is heating, the diagnostician **832** reports in the unit status file **834** that the amount of outdoor air used is acceptable (status=1). The diagnostician **832** in stage **1318**, when the condition in stage **1314** is false, checks to see if the H/C status stored in memory **256** is valid. When the H/C status is invalid, the unit status **834** is changed to indicate that the outdoor air ventilation is acceptable but the diagnostician **832** is unable to determine the heating or cooling mode (status=71). In stage **1322**, when the H/C status is valid, the diagnostician **832** records in the unit status file **834** that the outdoor air amount

is acceptable and the economizer is operating properly (status=5). When the diagnostician **832** determines the H/C status is cooling in stage **1312**, then the diagnostician **832** determines the economizer operational mode in stage **1324** based on the type of economizer being used.

A flow chart **1500** in FIG. **15** illustrates a subroutine according to one embodiment of the present invention in which the economizer operational mode is determined. The operational mode that is determined in this subroutine is not the actual operational status of the economizer, but rather, the operational status that the economizer should be using. After beginning in stage **1502**, the diagnostician **832** in stage **1504** retrieves the economizer type (ECONTYPE) from the DX configuration files **846**. Based on the economizer type (high-limit or differential economizers) different parameters will be used in order to determine the economizer mode. These parameters include a DEAD parameter, ON parameter and LIMIT parameter. The DEAD parameter is used to determine if the economizer should be floating either down from being OFF (not operating) or up from being ON (operating). The ON parameter indicates the temperature below which the economizer should operate. The LIMIT parameter is used to indicate the temperature above which the economizer should not operate.

When the economizer type in stage **1504** is not a high-limit type economizer (i.e., a differential type economizer), the DEAD parameter equals the outside air temperature plus a differential temperature value in stage **1506**. The differential temperature value is retrieved from the DX configuration files **846**. Further, in stage **1506**, the ON parameter is determined by adding the DEAD parameter to a DEADBAND parameter that is stored in DX configuration files **846**. The DEADBAND parameter specifies a temperature range below the LIMIT temperature parameter in which the economizer should not be operating. The LIMIT parameter is set to the return air temperature in stage **1506**. Alternatively, when the economizer is a high-limit type economizer, the DEAD temperature parameter equals the outside temperature. Further, the ON parameter equals the outside air temperature plus the DEADBAND temperature parameter from the DX configuration files **846**. In stage **1504**, the LIMIT temperature parameter equals a high temperature limit, which is specified in the DX configuration files **846**. In one embodiment, the HIGHLIMIT is 75° F., the DEADBAND parameter is 10° F., and the DIFFERENTIAL is 5° F. It should be appreciated that other parameter values can be used.

Following stages **1506** and **1508**, the diagnostician **832** in stage **1510** determines if the calculated ON parameter value is less than the LIMIT parameter value. When the ON value is less than the LIMIT value, the diagnostician **832** determines that the economizer is "ON" in stage **1512**, and an economizer mode of "ON" is stored in memory **256**. Different types of indicators can be used to symbolize the economizer operational mode. For example, the economizer mode can be "invalid", "0", "1" and "2" when the economizer mode is invalid, the economizer is "OFF", the economizer is either "ON" or "OFF", and the economizer is "ON", respectively. When the ON value is not less than the LIMIT value, the diagnostician **832** in stage **1514** then checks to see if the ON value is valid (i.e., not null). The ON parameter value can be invalid for a number of reasons. For example, the ON value can be invalid when the OAT sensor **214** is not operational. In stage **1516**, when the ON value is invalid, the economizer mode is registered in memory **526** as being invalid. On the other hand, if the ON value in stage **1514** is valid, then in stage **1518** the diagnostician **832** determines whether or not the temperature at which the economizer should be off (dead value) is less than the LIMIT parameter value. If so, in stage **1520** the economizer mode is registered in memory **526** as being either on or off. This situation can occur for example in a high-limit economizer when the outside air temperature is within the dead band temperature range that is below the high temperature limit. When the condition in stage **1518** is not satisfied, the diagnostician **832** then determines if the calculated DEAD and LIMIT values are valid in stage **1522**. If both are valid, then the diagnostician **832** registers in memory **256** that the economizer mode is "OFF" in stage **524**. Otherwise, the economizer mode in stage **1516** is registered as "INVALID" in memory **256**. After stages **1512**, **1516**, **1520** or **1524**, the economizer mode is returned to the calling routine.

As illustrated in FIG. **13**, after determining the economizer mode in stage **1324**, the diagnostician **832** determines if the economizer mode is only "ON" in stage **1326** (i.e., economizer mode=2). When the economizer is not only "ON", such that economizer mode is "INVALID", "OFF" or "EITHER ON OR OFF", then in stage **1328** the diagnostician **832** determines if a valid economizer mode is registered in memory **256**. When the economizer mode is invalid, then in stage **1320** the unit status file **834** is modified to indicate that the outdoor air flow is acceptable but the diagnostician **832** cannot check the economizer status (status=71) in stage **1320**. Otherwise, when the economizer mode is valid, a status indicating that outdoor air ventilation is acceptable and economizer status is acceptable is recorded (status=5) in the unit status file **834**. When the economizer is "ON" in stage **1326**, the diagnostician **832** registers in the unit status file **834** that the economizer is off but should be operating in stage **1330** (status=200).

In FIG. **12**, when in stage **1202** the OAF is greater than the required OAF, the diagnostician **832** determines from the economizer type whether the HVAC system **202** has an economizer in stage **1208**. When the HVAC system **202** is not using an economizer, the diagnostician **832** then determines the H/C status in stage **1602**, which is illustrated in FIG. **16**. In one form, the diagnostician **832** determines the H/C status by using the heating/cooling subroutine that was described above with reference to flow diagram **1400** in FIG. **14**. After determining the H/C status in stage **1602**, the diagnostician **832** determines in stage **1604** whether the HVAC system **202** is both heating and cooling at the same time (H/C status=3). If so, then the diagnostician **832** registers in the unit status file **834** that simultaneous heating and cooling is occurring (status=650) in stage **1606**. When the HVAC system **202** is not heating and cooling, the diagnostician **832** then determines if the HVAC system **202** is heating in stage **1608**. If system **202** is heating, the system status in the unit status file **834** is changed to indicate that too much outdoor air is being used while heating in stage **1610** (status=300). This occurs because the OAF is greater than what is required for heating. Otherwise, when the condition in stage **1608** is not satisfied, the diagnostician **832** in stage **1612** checks the H/C status to see if the HVAC system **202** is in a cooling mode. If so, in stage **1614** the unit status file **834** is modified to indicate that too much outdoor air is being used while cooling (status=310). In stage **1616**, the diagnostician **832** determines if the HVAC system **202** is not heating and not cooling (H/C status=0). When true, in stage **1618** the diagnostician **832** changes unit status **834** to reflect that too much outdoor air is being used while in a floating mode in which the system **220** is not heating and not cooling (status=325). If conditions in stage **1616** are not satisfied then the unit status file **834** is changed to reflect that too much outdoor air is being used (status=330) in stage **1620**.

As shown in FIG. **12**, when in stage **1208** the processor **254** determines through the diagnostician **832** that the HVAC system **202** is using an economizer, the diagnostician **832** then determines in stage **1702** (FIG. **17**) the H/C status of the HVAC system **202**. The H/C status is determined in stage **1702** using the heating/cooling status subroutine, which is illustrated in flow diagram **1400** in FIG. **14**. After determining the H/C status, the diagnostician **832** determines in stage **1704** if the HVAC system **202** is both heating and cooling at the same time. If true, the unit status file **834** is modified to reflect that simultaneous heating and cooling are occurring in stage **1706** (status=650). If false, the H/C status is checked to see if the HVAC system **202** is heating (H/C status=2). When the HVAC system **202** is heating, the unit status file **834** is changed to reflect that too much outdoor air is being used while heating (status=300) in stage **1710**.

When the HVAC system **202** is not heating, the diagnostician **832** then determines the economizer mode in stage **1712**. The economizer mode is determined by using economizer mode subroutine, which is depicted by flow diagram **1500** in FIG. **15**. After determining the economizer mode, the processor **254** through diagnostician **832** determines if the economizer mode is set to "OFF" in stage **1714**. If the economizer mode is "OFF", the diagnostician **832** in stage **1716** reports in the unit status file **834** that too much outdoor air is being used while cooling (status=310). When the condition in stage **1714** is not satisfied, the diagnostician **832** then checks to see if the economizer has been determined to be either on or off (in a floating mode) in stage **1718**. In stage **1720**, when the economizer mode is set to "ON or OFF" (i.e., economizer mode=1), the unit status field **834** is updated to reflect that the amount of outdoor air ventilation is acceptable but the diagnostician **832** is unable to check the economizer operation (status=19). When the condition in stage **1718** is not satisfied, the diagnostician **832** then determines in stage **1722** whether the economizer is "ON".

As depicted in FIG. **18**, when the diagnostician **832** is unable to determine whether the economizer should be "ON", the diagnostician **832** in stage **1802** determines if the OAF is greater than the maximum OAF, which is stored in DX configuration files **846**. If true, the diagnostician **832** modifies the unit status **834** to indicate that the outdoor airflow is greater than the specified maximum outdoor airflow limit in stage **1804** (status=585). Otherwise, in stage **1806**, the unit status file **834** is changed to reflect that the outdoor airflow is adequate but the operation of the economizer cannot be checked (status=19).

When the diagnostician **832** in stage **1722** (FIG. **17**) determines that the economizer should be "on", the diagnostician **832** in stage **1902** (FIG. **19**) determines if the OAF is greater than the specified maximum OAF. If true, the unit status file **834** is changed to reflect that the outdoor airflow is greater than the maximum outdoor airflow in stage **1904** (status=585). When the condition in stage **1902** is false, the diagnostician **832** in stage **1906** determines whether the OAF is less than the maximum OAF. When the OAF is not less than the maximum OAF, the diagnostician **832** in stage **1908** determines if the maximum OAF is a valid value. For example, the maximum OAF value can be invalid if the DX configuration files **846** are corrupted. The diagnostician **832**, when the maximum OAF value is valid in stage **1910**, modifies the unit status file **834** to indicate that the outdoor air flow is acceptable and the economizer is operating properly (status=5). Otherwise, in stage **1912** the diagnostician **832** modifies the unit status file **834** to reflect the outdoor air ventilation is acceptable and the economizer is operating properly (status=5). When in stage **1906** the calculated OAF is less than the maximum OAF, the diagnostician **832** in stage **1914** determines whether the HVAC system **202** has the ability to throttle the economizer dampers **208**. The diagnostician retrieves this throttling information from the DX configuration files **846**. When the HVAC system **202** is able to throttle, the unit status file **834** is modified to reflect that the outdoor airflow is acceptable and the economizer is operating properly (status=5). When the system **202** cannot throttle, in stage **1918**, the diagnostician **832** determines whether or not the HVAC system **202** is cooling (H/C status=1). When cooling, the unit status file **834** is changed to show that the economizer dampers **208** are not fully open but should be in stage **1920** (status equals 250). Otherwise, in stage **1922** the unit status file **834** is changed to reflect that too much outdoor air ventilation is being used while the HVAC system **202** is floating (status=325).

As shown in FIGS. **8A–B**, a web server **848** supplies the web data **822** to the monitoring facility (FIG. **1**) over computer network **106**. Web configuration files **850** are used to configure the web server **848**. In one embodiment, the web server **848** is an Apache web server. An Internet service daemon **852** is used to control communications between the web server **848** and the computer network **106**. Internet service configuration files **854** are used to configure the Internet service daemon **852**. The Internet service daemon **852** uses a TCP/IP (Transmission Control Protocol/Internet Protocol) **856** to communicate over computer network **106**. It should be appreciated that other types of network protocols can be used. In one embodiment, the Internet service daemon **852** is a "Internet super server" daemon (inetd) that is used to manage communication over the computer network **106**. As should be appreciated, stand-alone service daemons can also be used for communication over computer network **106**.

System **800**, as shown in FIG. **8A**, includes a web pages directory **858**, a web images directory **860**, a web scripts directory **862**, and a web help directory **864**. The web pages directory **858** contains a number of web pages **866** that are generated in part based on the information contained in the web data directory **822**. These web pages **866** in the web pages directory **858** include a setup page **868**, a status page **870**, a trend page **872**, a sensor page **874**, an archive page **876**, a log book page **878**, and a help page **880**. An example of setup page **868**, which can be displayed at monitoring facility **102** and/or in service vehicle **104**, is depicted in FIG. **20**. As shown, screen **2000** includes a number of tabs **2002** that are used to navigate between various pages **866**. Unit ID field **2004** identifies a particular HVAC system **202** that is located at a particular equipment site **108**. The communication system **100** according to the present invention allows a service technician to monitor various HVAC systems **202** at different equipment sites **108**. The operational status of the particular HVAC system **202** (unit) is displayed in field **2006**, and the current date and time are displayed in field **2008**. The web server **848** generates the unit status field **2006** based on the status information contained in the unit status file **834**. The service technician can set the required OAF value in field **2010**. To indicate the economizer type or if an economizer is being used, the operator at the monitoring facility **102** can set the economizer type in field **2012**. The diagnostic action taken on receiving a "trip" signal on TRIP communication pathway **236** is set in field **2014**. In one embodiment, upon receipt of the "trip" signal a trend log dump can be initiated and/or a telephone call to the monitoring facility **102** can be placed. As should be appreciated,

this "trip" signal can also be ignored. Password information is entered into field **2016**. The information entered into screen **2000** can be saved by selecting the save button **2018**, and the fields can be reset by selecting reset button **2020**.

An example of a status page **870** is illustrated in FIG. **21**. As shown, screen **2100** includes navigation tabs **2002**, a unit ID field **2004**, a status field **2006**, and a date/time field **2008**. As mentioned above, the diagnostician **832** determines the current status of a selected HVAC system **202**, and this unit status information is stored in the unit status file **834**. The web server **848** uses the information in unit status file **834** to create the sensor status field **2006**. Screen **2100** further includes an equipment representation/picture field **2102**. Icons **882** and images **884** are stored in the web images directory **860**. The image field **2102** is generated from the images stored in the image files **884**. Any web scripts **886** that are used by the web server **848** are stored in the web scripts directory **862**.

In FIG. **22**, an example of a trend page **872** is shown in display screen **2200**. Display screen **2200** can be used to monitor the conditions of the HVAC system **202** remotely at monitoring facility **102**. Screen **2200** includes a number of navigation tabs **2002**, unit ID field **2004**, status field **2006**, and date field **2008**. Screen **2200** further includes a trend portion **2202** in which trend information from the sensors **212** is displayed. As discussed above, this trending information is generated by the processor **254** through the trending system **824**. The web server **848** retrieves the trend information from the trend information file **826** that is created by the trending system **824**. Trend portion **2202** includes a date column **2204** in which the date of the reading is listed, a time column **2206** in which the time of the individual readings are listed, a status column **2208** listing the status of the HVAC system **202** at that time, and multiple sensor reading columns **2210** that lists the readings for the particular sensors **212** at the displayed time.

An example of sensor page **874** is depicted with screen **2300** in FIG. **23**. The information contained in screen **2300** can be used to monitor the current status of particular sensors **212**. Screen **2300** includes navigation tabs **2002**, unit ID field **2004**, status field **2006**, and date field **2008**. Screen **2300** further includes one or more sensor reading fields **2302**. Individual fields **2302** contain status icons **2304**, which alert the technician as to the status of particular sensors **212**. These icons are retrieved by the web server **848** from the icon file **882**. The web server **848** retrieves the information for the current reading fields **2302** from the sensor channels **812** in the web data directory **822**. The web server **848** initiates a request with the file system **810** for the particular sensor channel files **812**. In response, the device driver **802** generates the channels **812** from which the web server **848** can generate screen **2300**.

Screen **2400** in FIG. **24** illustrates an example of an archive page **876** according to one embodiment of the present invention. Screen **2400** includes multiple navigation tabs **2002** and an archive list portion **2402**. The archive portion **2402** includes a date/time column **2404** in which the date and time for the readings is displayed and one or more archived reading columns **2406**. As discussed above, the archival system **828** takes readings from the trending system **824** and stores them into the permanent archive file **830** in memory **256**. The web server **848** retrieves the information from the permanent archive **830** so as to generate screen **2400**. In one embodiment, the readings are archived every fifteen minutes. It should be appreciated that different archiving periods may be used.

Screen **2500** in FIG. **25** illustrates an example of a logbook page **878** according to one embodiment of the present invention. Screen **2500** includes one or more navigation tabs **2002**, unit ID field **2004**, status field **2006**, and date/time field **2008**. In addition, screen **2500** includes password field **2016**, save button **2018**, and reset button **2020**. The password field **2016** is used to require entry of a password in order to create a new log book entry for a selected HVAC system **202**. The particular log book entry is typed into logbook entry field **2502**. Previous log book entries are displayed in field **2504**. To save the entry, save button **2018** is selected. Reset button **2020** clears the entry in the log book entry portion **2502**.

FIG. **26** illustrates an example of a help page **880** according to one embodiment of the present invention. In screen **2600**, navigation tabs **2002** are used to navigate between the various pages **866**. Help section **2602** of screen **2600** allows the user to access additional help pages **888**, which are stored in the help directory **864**.

In another embodiment of the present invention, OAT sensor **214**, MAT sensor **216**, RAT sensor **218** and DAT sensor **220** are retrofitted to the HVAC system **202**. Processor **254** is operable to determine the status of the HVAC system **202** through the sensors **212**, building occupancy status and OAF requirements.

While specific embodiments of the present invention have been shown and described in detail, the breadth and scope of the present invention should not be limited to the above-described exemplary embodiments, but should be defined only in accordance with the following claims and their equivalents. All changes and modifications that come within the spirit of the invention are desired to be protected.

What is claimed is:

1. A method, comprising:

determining occupancy of a building with a processor, wherein the building has an air treatment system with a fan;

determining operational status of the fan with the processor;

calculating an outdoor air fraction of the system with the processor;

determining validity of the outdoor air fraction with the processor;

determining outdoor air fraction status with the processor by comparing the outdoor air fraction to a required outdoor air fraction for the building;

determining current mode status with the processor by comparing the outdoor air fraction with current mode of operation of the system;

determining unit status of the system with the processor based at least on the occupancy of the building, the operational status of the fan, the validity of the outdoor air fraction, the outdoor air fraction status, and the current mode status; and

providing output based at least in part on the unit status.

2. The method of claim **1**, wherein:

said determining operational status of the fan includes receiving a fan signal from a fan sensor operatively coupled the processor;

said determining the occupancy of the building includes determining validity of the fan signal; and

said determining the unit status is based on the validity of the fan signal.

3. The method of claim **1**, wherein said calculating the outdoor air fraction includes:

measuring a return air temperature in the system with a return air temperature sensor operatively coupled to the processor;

measuring an outdoor air temperature in the system with an outdoor air temperature sensor operatively coupled to the processor;

measuring a mixed air temperature in the system with a mixed air temperature sensor operatively coupled to the processor; and

wherein the outdoor air fraction is based on the difference between the mixed air temperature and the return air temperature divided by the difference between the outdoor air temperature and the return air temperature.

4. The method of claim **3**, wherein:

said determining the unit status includes validity checking the return air temperature, the mixed air temperature and the outdoor air temperature; and

the unit status is based on said validity checking.

5. The method of claim **1**, wherein:

said determining the outdoor air fraction status includes establishing that the outdoor air fraction is less than the required outdoor air fraction; and

said determining the unit status establishing the unit status as low outdoor air supply.

6. The method of claim **1**, wherein said providing the output includes displaying the unit status in a status page at a remote monitoring facility.

7. A system, comprising:

means for determining occupancy of a building, wherein said building has an air treatment system with a fan;

means for determining operational status of said fan;

means for calculating an outdoor air fraction of said system;

means for determining validity of said outdoor air fraction;

means for determining outdoor air fraction status by comparing said outdoor air fraction to a required outdoor air fraction for said building;

means for determining current mode status by comparing said outdoor air fraction with current mode of operation of said system; and

means for determining unit status of said system based at least on said occupancy of said building, said operational status of said fan, said validity of said outdoor air fraction, said outdoor air fraction status, and said current mode status.

8. A system, comprising:

a processor operable to determine a unit status of an air treatment system for a building;

a fan sensor operatively coupled to the processor for determining an operational status of a fan in the air treatment system, wherein the processor is operable to determine occupancy of the building based on the fan sensor;

a return air sensor operatively coupled to the processor for sensing return air temperature in the air treatment system;

an outdoor air sensor operatively coupled to the processor for sensing outside air temperature;

a mixed air temperature sensor operatively coupled to the processor for sensing mixed sir temperature in the air treatment system;

wherein the processor is operable to determine an outdoor air fraction based on the return air temperature, the outdoor air temperature, and the mixed air temperature, the processor being operable to determine an outdoor air fraction status by comparing the outdoor air fraction to a required outdoor air fraction for the building,

wherein the processor is operable to determine a heating/cooling mode status of the air treatment system by comparing the outdoor air fraction with a current healing/cooling mode of the air treatment system; and

wherein the processor is operable to determine the unit status of the air treatment system based on the occupancy of the building, the operational status of the fan, the validity of the outdoor air fraction, the outdoor air fraction status, and the heating cooling mode status of the air treatment system.

9. The system of claim **8**, wherein the outdoor air fraction is based on the difference between the mixed air temperature and the return air temperature divided by the difference between the outdoor air temperature and the return air temperature.

10. The system of claim **8**, further comprising the air treatment system.

11. The system of claim **10**, further comprising:

wherein the air treatment system includes a controller that is operatively coupled to the processor;

wherein the air treatment system includes a supplemental heating coil for heating, a reversing control valve for switching between an air conditioning mode and a heat pump mode in the air treatment system, and a compressor;

a heating sensor operatively coupled to the controller for sensing a heating status of the heating coil;

a reversing control valve sensor operatively coupled to the controller for sensing a reversing control valve status of the reversing control valve;

a cooling sensor operatively coupled to the controller for sensing a cooling status of the compressor;

wherein the controller is operable to send to the processor the heating status, the reversing control valve status, and the cooling status; and

wherein the processor is operable to determine the current heating/cooling mode based on the heating status, the reversing control valve status, and the cooling status.

* * * * *

UNITED STATES PATENT AND TRADEMARK OFFICE

CERTIFICATE OF CORRECTION

PATENT NO. : 6,778,945 B2
DATED : August 17, 2004
INVENTOR(S) : David P. Chassin et al.

It is certified that error appears in the above-identified patent and that said Letters Patent is hereby corrected as shown below:

Column 26,
Line 7, replace “mixed sir” with -- mixed air --.

Signed and Sealed this

Twenty-first Day of December, 2004

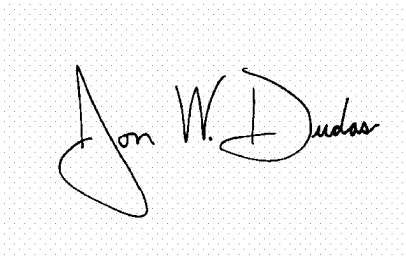

JON W. DUDAS
Director of the United States Patent and Trademark Office