US007022505B2

(12) **United States Patent**
Chandler et al.

(10) **Patent No.: US 7,022,505 B2**
(45) **Date of Patent: Apr. 4, 2006**

(54) **APPARATUS AND METHOD FOR ULTRASONIC TREATMENT OF A LIQUID**

(75) Inventors: **Darrell P. Chandler**, Richland, WA (US); **Gerald J. Posakony**, Richland, WA (US); **Leonard J. Bond**, Richland, WA (US); **Cynthia J. Bruckner-Lea**, Richland, WA (US)

(73) Assignee: **Battelle Memorial Institute**, Richland, WA (US)

(*) Notice: Subject to any disclaimer, the term of this patent is extended or adjusted under 35 U.S.C. 154(b) by 471 days.

(21) Appl. No.: **10/269,772**

(22) Filed: **Oct. 10, 2002**

(65) **Prior Publication Data**

US 2003/0049810 A1 Mar. 13, 2003

Related U.S. Application Data

(62) Division of application No. 09/561,832, filed on Apr. 28, 2000, now Pat. No. 6,506,584.

(51) **Int. Cl.**
C12N 13/00 (2006.01)
C12M 1/00 (2006.01)

(52) **U.S. Cl.** **435/173.1**; 435/283.1

(58) **Field of Classification Search** 210/748; 435/173.1, 283.1

See application file for complete search history.

(56) **References Cited**

U.S. PATENT DOCUMENTS

3,715,104	A	2/1973	Cottell	
4,205,966	A	6/1980	Horikawa	
4,492,338	A	1/1985	Marelli	
4,741,839	A	5/1988	Morton	
4,764,021	A	8/1988	Eppes	
4,919,807	A	4/1990	Morton	
5,032,027	A *	7/1991	Berliner, III	366/15
5,087,379	A	2/1992	Morton	
5,482,726	A	1/1996	Robinson, Jr.	
5,538,628	A	7/1996	Logan	
5,629,185	A	5/1997	Stanzl	
5,979,664	A	11/1999	Brodeur	

FOREIGN PATENT DOCUMENTS

CA	2151874	12/1996
DE	44 07 564	9/1995
DE	198 20 466 A1	11/1999
DE	198 20 466 C2	6/2002
FR	1 407 842	9/1975
FR	2 708 873	2/1995
JP	10-29716	2/1998
WO	WO 95/04600	2/1995

OTHER PUBLICATIONS

Mason, T.J. 1992, Industrial Sonochemistry: Potential and Practicality, Ultrasonics, vol. 30, pp. 192-196.*
Belgrader, et al., A Minisonicator to Rapidly Disrupt Bacterial Spores for DNA Analysis, Anal. Chem., 1999, 71, pp. 4232-4236.
McIntosh, et al., Continuous Treatment of Micro Organisms by High Intensity Ultrasound, Oct. 20-21, 1970, pp. 6-8.
T.J. Mason, Industrial Sonochemistry: Potential and Practicality, Ultrasonics, 1992, Vol. 30, No. 3, pp. 192-196.
E.L. Carstensen, et al., 5. Implications of Nonlinear Contributions to Radiation Forces & Acoustic Streaming, Biomedical Applications pp. 435-436.
Biological Effects of Ultrasound: Mechanism and Clinical Implications, NCRP Report No. 74, pp. 94-95, 1983.
Advanced Sonic Processing Systems Brochure, The Vibrating Tray.
Advanced Sonic Processing Systems Brochure, The Vibrating Tray, VT-4608.
Advanced Sonic Processing Systems Brochure, The Vibrating Tray, VT-9636.
Advanced Sonic Processing Systems Brochure, The NEARFIELD Acoustical Processor.
Advanced Sonic Processing Systems Brochure, The Sonochemical Reaction Vessel.
Advanced Sonic Processing Systems Brochure, The Ultrasonic Trough.
Advanced Sonic Processing Systems Brochure, The Ultrasonic Trough, UT-3216.
Advanced Sonic Processing Systems Brochure, The Ultrasonic Trough, Ut-4808.

* cited by examiner

Primary Examiner—Ralph Gitomer
Assistant Examiner—Kailash C. Srivastava
(74) *Attorney, Agent, or Firm*—James D. Matheson

(57) **ABSTRACT**

The present invention is an apparatus for ultrasonically treating a liquid to generate a product. The apparatus is capable of treating a continuously-flowing, or intermittently-flowing, liquid along a line segment coincident with the flow path of the liquid. The apparatus has one or more ultrasonic transducers positioned asymmetrically about the line segment. The ultrasonic field encompasses the line segment and the ultrasonic energy may be concentrated along the line segment. Lysing treatments have been successfully achieved with efficiencies of greater than 99% using ultrasound at MHz frequencies without erosion or heating problems and without the need for chemical or mechanical pretreatment, or contrast agents. The present invention overcomes drawbacks of current ultrasonic treatments beyond lysing and opens up new sonochemical and sonophysical processing opportunities.

24 Claims, 5 Drawing Sheets

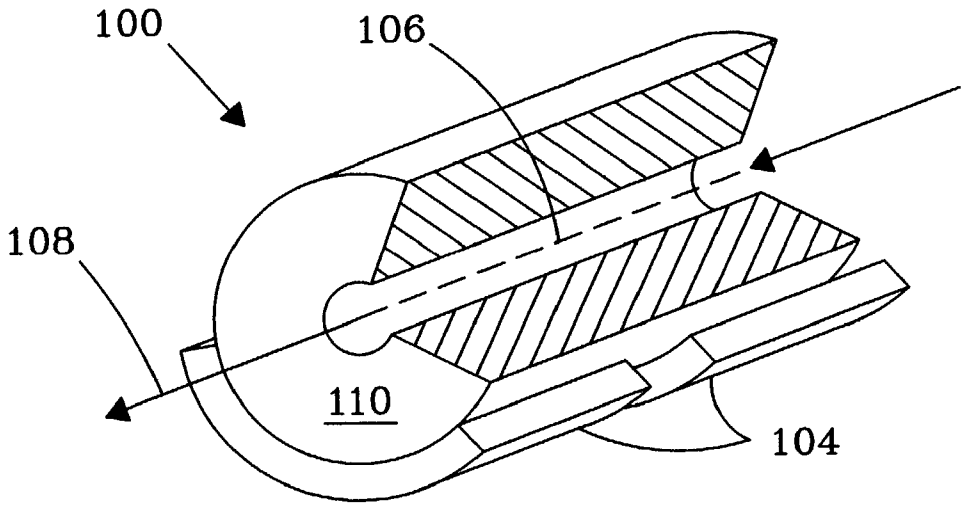

Fig. 1a

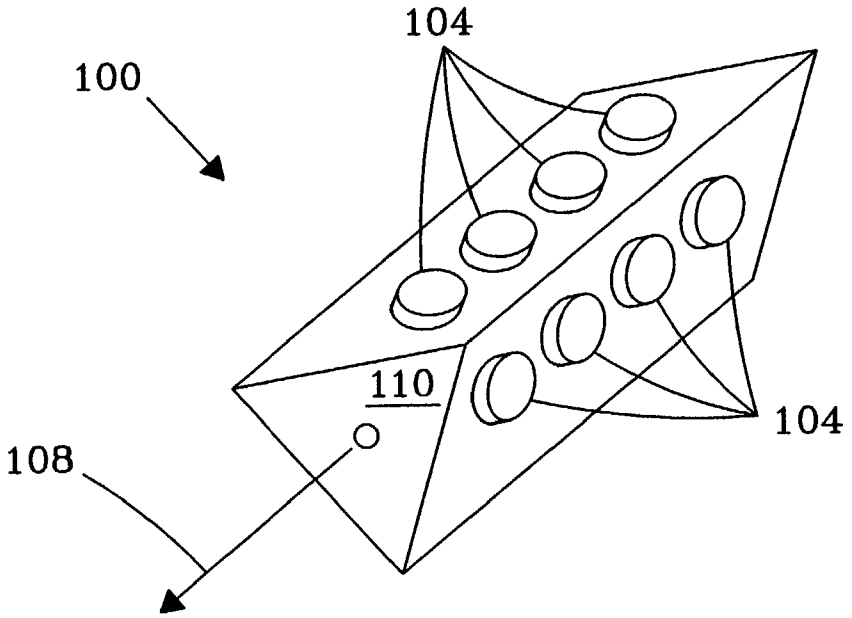

Fig. 1b

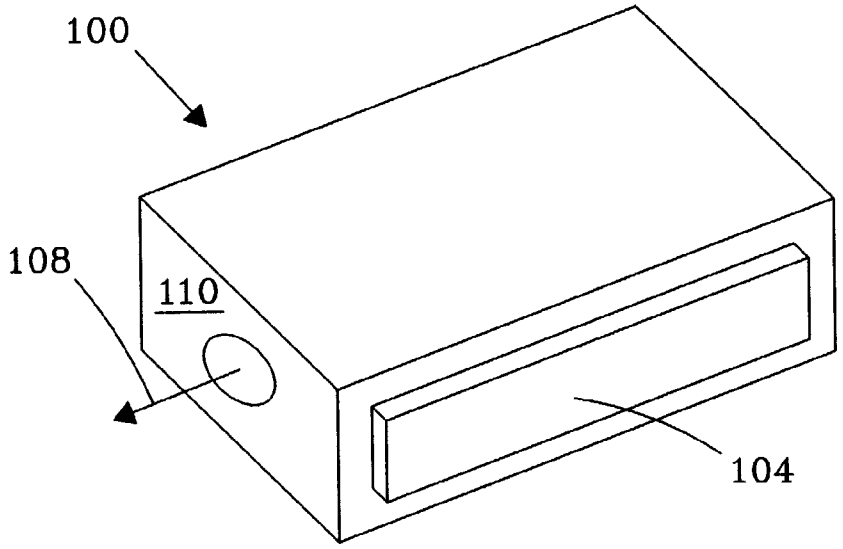

Fig. 1c

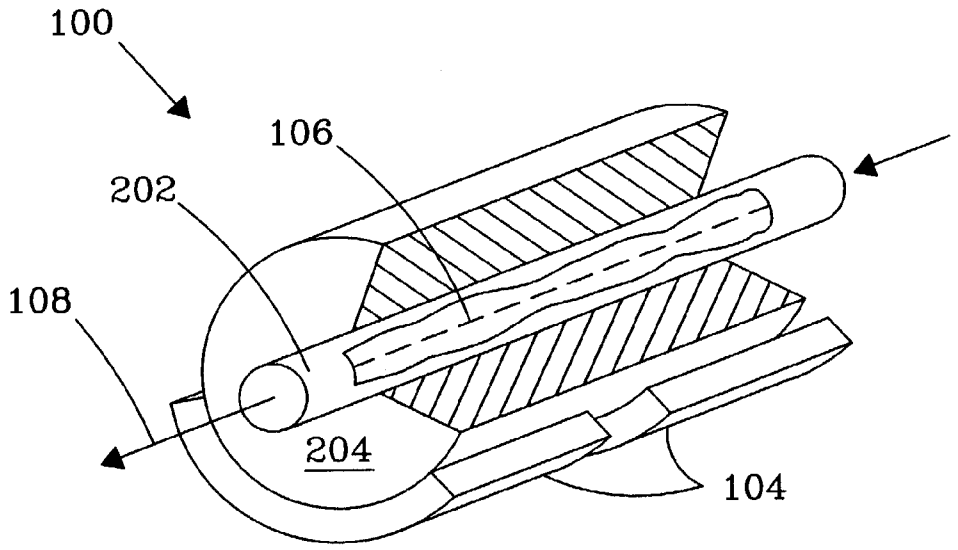

Fig. 2

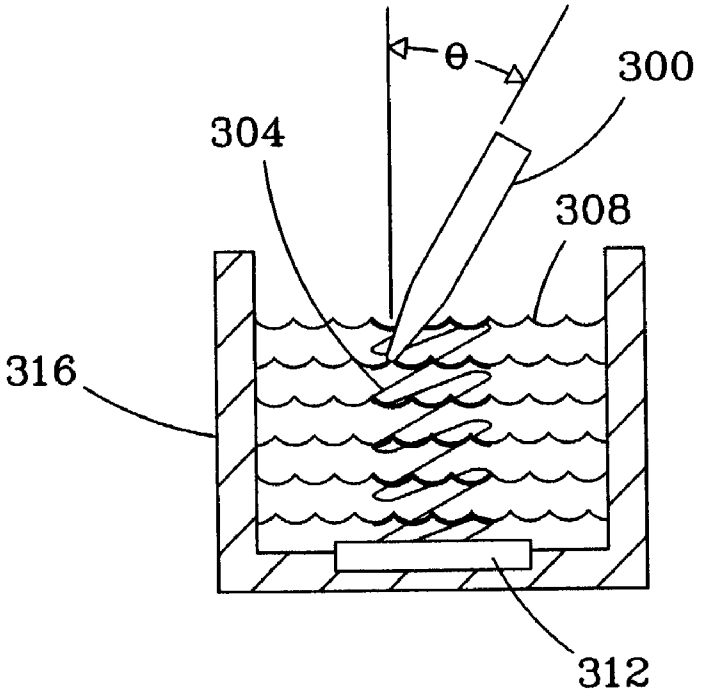

Fig. 3

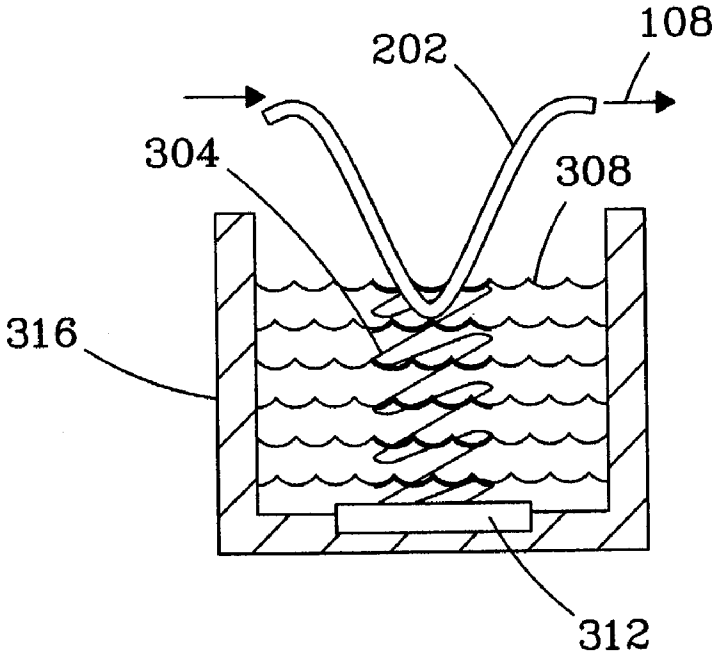

Fig. 4

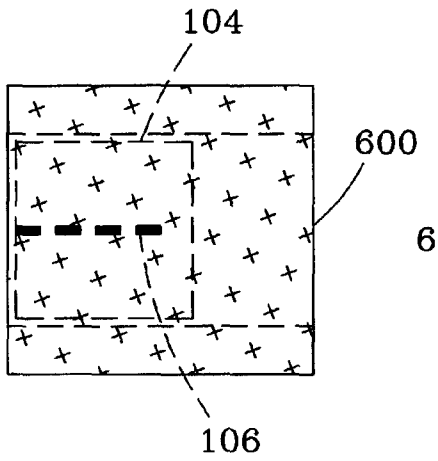

Fig. 5a

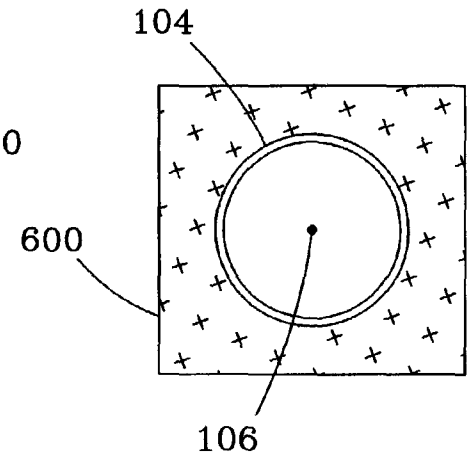

Fig. 5b

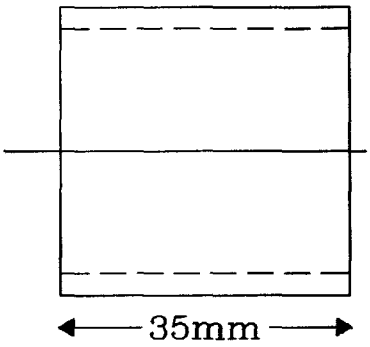

Fig. 6a

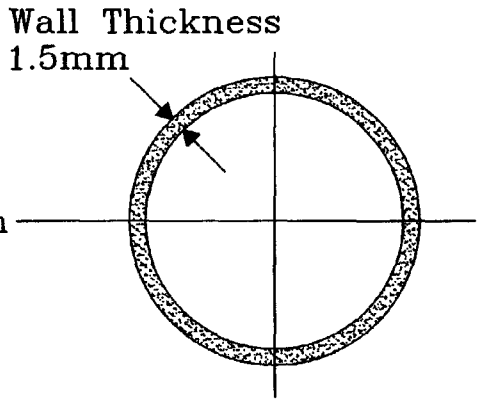

Fig. 6b

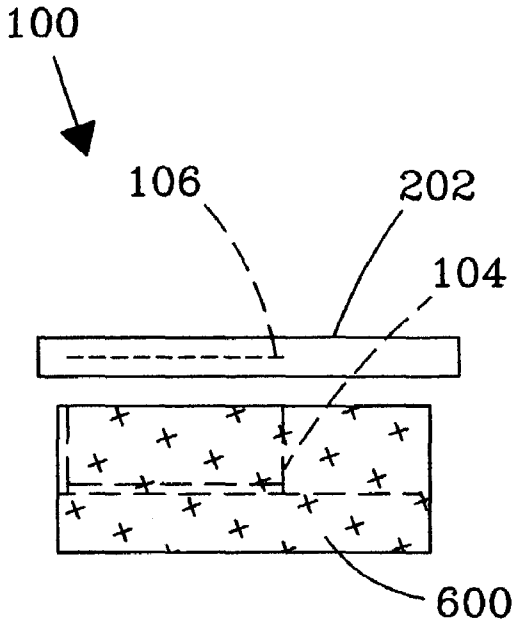

Fig. 7a

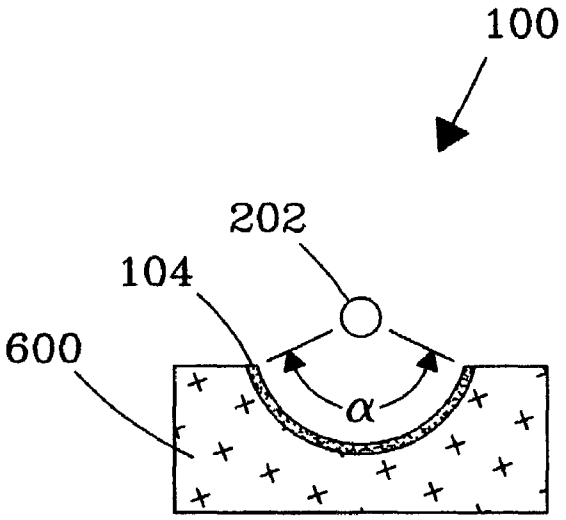

Fig. 7b

APPARATUS AND METHOD FOR ULTRASONIC TREATMENT OF A LIQUID

CROSS REFERENCE TO RELATED APPLICATION

This patent application is a divisional application of Ser. No. 09/561,832 filed Apr. 28, 2000 now U.S. Pat. No. 6,506,584.

This invention was made with Government support under Contract DE-AC0676RLO1830 awarded by the U.S. Department of Energy. The Government has certain rights in the invention.

FIELD OF THE INVENTION

The present invention is an apparatus and method for ultrasonically treating a liquid-based medium to generate a product. The liquid-based medium, hereinafter referred to simply as "liquid," means single-phase liquids having one or more constituents, as well as liquid-solid mixtures such as suspensions, dispersions, slurries, colloids, and biological tissue.

BACKGROUND OF THE INVENTION

Ultrasound is a form of vibrational energy. When it propagates through, and interacts with, a liquid, the energy is attenuated by scattering or absorption. At low ultrasound powers, the energy is absorbed by the liquid in a thermal interaction that causes local heating. At higher powers the interaction becomes increasingly non-linear and both non-thermal mechanical and cavitational mechanisms become significant. The non-thermal mechanical mechanisms can include radiation pressure, acoustic streaming, radiation forces, torques, and near-boundary/bubble hydrodynamic shear forces.

These ultrasonic interactions with a liquid, particularly those involving cavitation, have been exploited for many years in devices that clean or separate materials, accelerate or modify chemical reactions, and kill or lyse cells. Such devices typically utilize sonic horns, or probes, and are designed to optimize the cavitation mechanism at frequencies generally in the range of 20–50 kHz. For comparison, ultrasound devices used in the medical field typically operate at frequencies of 0.8–15 MHz and at lower power densities (<0.5 W/cm^2 for diagnostics and ~0.5–3 W/cm^2 for therapy).

Ultrasound offers an attractive cell lysing tool to obtain sufficient amounts of nuclear, cytoplasmic, or other cellular material for commercial use (e.g., proteins), or for analysis and identification (e.g., anthrax or e-coli). Effective and rapid lysing is particularly important for the most refractory microorganisms of concern to public health including protozoan cysts, fungal hyphae, Gram positive bacteria, and spores. In a suspension containing microorganisms, the nature of the ultrasound-suspension interaction is complex and has been shown to depend on at least the power level in the ultrasound, the ultrasound field geometry, and frequency of the ultrasound.

Current ultrasound lysing (and other material processing) devices typically use kHz frequencies with a horn or probe configured to optimize cavitation. For a given frequency, there is a minimum power level necessary to cause cavitation, known as the cavitation threshold. In general, the power necessary to achieve cavitation increases with frequency. Thus, when using MHz frequencies, contrast agents

(e.g., microbubbles, microparticles) are often introduced in the liquid to help reduce the cavitation threshold by increasing the mechanical interaction and inducing cavitation-like phenomena. In some MHz applications, it is only with the presence of such contrast agents that cavitation occurs.

Because ultrasonic vibration is rapidly attenuated in passing through long paths in a liquid, it is common to effect cell lysis by applying the cavitating kHz ultrasound in a confined chamber. Current sonic lysing devices typically employ a batch processing approach using static liquid reaction chambers. For example, Belgrader et al (Anal. Chemistry, Vol. 71, No. 19, Oct. 1, 1999) employs a horn-based minisonicator for spore lysis and subsequent polymerase chain reaction analysis. Such devices are prone to erosion of the sonic horn tip and unacceptable heating of the liquid.

A few flow-through devices have been developed, though they still incorporate sonic probes depositing energy in a confined chamber. For example, the flow-through devices disclosed in U.S. Pat. No. 3,715,104 and McIntosh and Hobbs (Proc. of Ultrasounics in Industry, pp 6–8, Oct. 20–21, 1970) agitate a liquid between two closely spaced flat surfaces. Furthermore, T. J. Mason (Ultrasonics, 1992, Vol. 30, No. 3, pp 192–196) discloses other flow-through sonic devices that incorporate transducers symmetrically positioned about the flow path of a liquid.

Most current ultrasound processing devices, however, cannot meet the practical, economical, and operational requirements associated with industrial-scale chemical/physical processing systems, field deployable systems, or continuous biomonitoring systems. This is especially true for systems requiring automation or remote operation. Such systems require rapid, effective, efficient, and near-continuous processing with minimal or no manual steps. As the present invention will illustrate, there is an opportunity to apply non-conventional combinations of ultrasonic power, frequency, and field geometry to address current lysing needs and to improve existing (and develop new) chemical and physical processing methods for materials. In particular, ultrasonic treatment at conditions that avoid conventional cavitation and promote non-thermal mechanical interactions shows great potential.

BRIEF SUMMARY OF THE INVENTION

The present invention is an apparatus and method for ultrasonically treating a liquid to generate a product. The apparatus is capable of treating a continuously-flowing, or intermittently-flowing, liquid along a line segment coincident with the flow path of the liquid. The apparatus has one or more ultrasonic transducers positioned asymmetrically about the line segment. The term 'asymmetric' as used herein in relation to asymmetric positioning of transducers means radially asymmetric orthogonal to the axis of the line segment. The ultrasound field encompasses the line segment and the ultrasonic energy may be concentrated along the line segment Lysing treatments have been successfully achieved with efficiencies of greater than 99% using ultrasound at MHz frequencies without the typical cavitation and associated problems, and without the need for chemical or mechanical pretreatment, or contrast agents.

An object of the present invention is to ultrasonically treat a continuously-flowing or an intermittently-flowing liquid to generate a product.

A further object of the present invention is to maximize the amount of product generated for a given transducer power input.

A further object of the present invention is to provide a rapid, effective, and field-deployable ultrasonic treatment system that requires minimal manual intervention.

A further object of the present invention is to lyse cells, producing available nuclear, cytoplasmic, or other cellular material, with greater than 80% efficiency.

A further object of the present invention is to lyse cells in a liquid that does not require chemical or physical pretreatment, or contrast agents.

A further object of the present invention is to improve the productivity of sonochemical and sonophysical treatments that have traditionally been based on batch processing.

The subject matter of the present invention is particularly pointed out and distinctly claimed in the concluding portion of this specification. However, both the organization and method of operation, together with further advantages and objects thereof, may best be understood by reference to the following description taken in connection with accompanying drawings wherein like reference characters refer to like elements.

BRIEF DESCRIPTION OF THE DRAWINGS

FIG. **1**A is an illustration of the present invention with a cylindrical sonic coupler;

FIG. **1**B is an illustration of the present invention with a triangular sonic coupler;

FIG. **1**C is an illustration of the present invention with a rectangular sonic coupler;

FIG. **2** is an illustration of the present invention with a reaction tube;

FIG. **3** is an illustration of a static liquid chamber used in lysis experiment 1;

FIG. **4** is an illustration of a flow-through chamber used in lysis experiment 2;

FIG. **5**A is a side view of the full cylinder transducer configuration used in experiment 3;

FIG. **5**B is an end view of the full cylinder transducer configuration used in experiment 3;

FIG. **6**A is a side view of the piezoelectric element;

FIG. **6**B is an end view of the piezoelectric element;

FIG. **7**A is a side view of the flow-through device with sonic energy concentrated along a line segment used in lysis experiments 4 and 5; and

FIG. **7**B is an end view of the flow-through device with sonic energy concentrated along a line segment used in lysis experiments 4 and 5.

DETAILED DESCRIPTION OF THE INVENTION

The present invention is an apparatus and method for ultrasonically treating a liquid to generate a product. The liquid may be a single-phase liquid having one or more constituents (e.g., chemical/petrochemical solutions and biological liquids such as blood plasma and urine) as well as liquid-solid mixtures such as suspensions, dispersions, slurries, colloids, and biological tissue. The liquid-solid mixture may comprise biological material selected from the group consisting of microorganisms, cells, viruses, tissues, and combinations thereof. The product includes, but is not limited to, available nuclear, cytoplasmic, and other cellular material from lysed cells and other materials used in industry that are activated, crystallized, precipitated, sterilized, extracted, impregnated, dispersed, defoamed, degassed, deaggregated, homogenized, or emulsified by the ultrasonic interaction.

The apparatus is capable of treating a continuously-flowing or intermittently-flowing liquid. For example, the process may require a continuously-flowing liquid to optimize the reaction that generates the product, maintain a high operational productivity, or to maintain vigilance in monitoring a biological or chemical threat. Intermittent flows may be implemented in those circumstances where continuous batch treatments are desired.

Several embodiments of the present invention are shown in FIGS. **1**A–**1**C. The liquid to be treated flows along the flow path **108** through the device **100**. The liquid in the device **100** is exposed to a unique ultrasound field produced by one or more ultrasound-producing transducer(s) **104** positioned asymmetrically about the flow path **108**. The ultrasonic field encompasses the flow path **108** of the liquid within the device **100** including a line segment **106** (see FIG. **1**A, not shown in FIGS. **1**B–**1**C for clarity) that is coincident with the longitudinal axis of the flow path **108**. The transducer(s) **104** is acoustically coupled to the liquid by a sonic coupler **110**. In the embodiments of FIGS. **1**A–**1**B, the transducer(s) are positioned so as to concentrate sonic energy along the line segment **106**. The transducer(s) **104** include piezoelectric, magnetorestrictive, and other devices capable of producing an ultrasonic field. The line segment **106** may be straight or curved. For example, the line segment **106** (and flow path **108**) may be helical to increase the residence time (and thus, treatment time) of the liquid in the sonic field.

In these embodiments, the sonic coupler **110** is a solid material that may be rigid or flexible, and provides the flow path **108** for the liquid (the liquid may enter and exit the device **100** along the flow path **108** by connecting tubing or piping (not shown) to the entrance and exit of the device **100**). It is preferable that the sonic coupler **110** is made of a material with a low attenuation coefficient to avoid overheating of the sonic coupler **110** and has an acoustical impedance value between the acoustical impedance of the liquid and that of the transducer(s) **104**. For example, aqueous liquids have an acoustical impedance of approximately 1.5×10^6 kg/m^2/s and piezoelectric transducer materials (e.g., high density ceramics) typically have acoustical impedances in the range of 20×10^6–36×10^6 kg/m^2/s. Thus, candidate sonic coupler **110** materials include metals (e.g., aluminum), ceramics, glasses, minerals, and combinations thereof. Due to the various geometries that may be required to obtain an asymmetric positioning of the transducer(s) **104**, it is preferable that the sonic coupler **110** is easily machinable such as a machinable ceramic. Machinable ceramics include glass-mica (e.g., MACOR®, MACOR is a registered trademark of Corning Glass Works), boron-nitrate, aluminum silicate, alumina bisque, and combinations thereof.

It is more preferable that the sonic coupler **110** is made of a material with an acoustical impedance value approximately equal to the geometric mean of the acoustical impedances of the liquid and the transducer(s) **104**. For example, if the liquid and transducer(s) **104** have acoustical impedances of 1.5×10^6 kg/m^2/s and 30×10^6 kg/m^2/s, respectively, a material having an acoustical impedance of $(1.5\times30)^{1/2}=6.7$ would be more preferred.

As known to those skilled in the art, there are various methods to ensure an adequate acoustical coupling between the transducer(s) **104** and the sonic coupler **110** itself. For example, the two components may be epoxied together or machined to a close fit and smooth surface finish that minimizes loss of ultrasound energy associated with gaps between the two components.

Though the embodiments of the present invention shown in FIGS. **1**A–**1**C illustrate cylindrical, triangular, and rectangular sonic couplers **110** and various numbers of cylindrical and planar transducer(s) **104**, the present invention is not limited to such shapes and numbers. For example, the sonic coupler **110** may be hexagonal (or oval) with one or more planar transducer(s) **104** asymmetrically positioned on the sonic coupler **110**. In addition, the transducer(s) **104** may comprise a single transducer and be concave with the sonic coupler **110** machined or shaped to accommodate such transducer(s) **104** geometry.

An alternative embodiment of the present invention is the device **100** shown in FIG. **2**. In this embodiment, the sonic coupler **110** of FIGS.**1**A–**1**C is replaced by a reaction tube **202** and a reaction tube coupler **204**. The reaction tube **202** provides the flow path **108** for the liquid and is acoustically coupled to both the liquid and the reaction tube coupler **204**. As in the previous embodiments, the reaction tube coupler **204** is acoustically coupled to the transducer(s) **104**. The reaction tube **202** may be made of any structural material that is compatible (e.g., chemically) with the fluid and reaction tube coupler **204** including, but not limited to, metal, glass, and plastic. In this embodiment, the reaction tube coupler **204** can be made of the same material (and in the same shape) as the sonic coupler **110** of the embodiments shown in FIGS. **1**A–**1**C or it can be a liquid, preferably water. Though the reaction tube coupler **204** is illustrated as being cylindrical in FIG. **2**, the present invention is not limited to such a shape, especially if the reaction tube coupler **204** is a liquid. In such circumstances, a requirement is that the liquid provide sufficient acoustical coupling between the reaction tube **202** and the reaction tube coupler **204** (for example, by immersing the reaction tube **202** and the reaction tube coupler **204** in a liquid bath).

Furthermore, though the embodiments of the present invention shown in FIGS. **1**A–**1**C and FIG. **2** illustrate a single flow path **108**, the present invention is not limited to a single flow path **108**. That is, it is apparent that multiple flow paths could be incorporated in the device **100** of FIGS. **1**A–**1**C and FIG. **2** (e.g., to increase the volumetric processing or treatment rate of the liquid).

The following successful experiments, with the notable exception of experiment 3, illustrate new combinations of ultrasound power, frequency, and field geometry that meet the challenge of lysing Bacillus globigii (BG) spore suspensions. Such successful lysis experiments are not intended to limit the present invention to such a specific biological treatment. It will be apparent to those skilled in the art that the present invention overcomes drawbacks of current ultrasonic treatments beyond lysing and opens up new sonochemical and sonophysical treatments for material processing industries including, but not limited to, chemical, biochemical, petrochemical, food, and mining.

Furthermore, though some details on how the fluid in the present invention is made to flow through the device **100** are provided below, such features should not be interpreted as limitations to the present invention. That is, there are many different mechanisms to cause the liquid to flow (pumps, pneumatic, gravity feed, etc.) and a variety of piping and valving arrangements to have the liquid flow intermittently. The variety of components and arrangements to accomplish fluid flow in the present invention are known to those skilled in the art of fluid systems.

EXPERIMENTAL PROCEDURE

BG spore suspensions originated from stock preparations maintained at Dugway Proving Grounds. Spores were resuspended in sterile water and subjected to several rounds of vigorous mixing, settling and decanting to eliminate spore clumps. Plate counts and microscopy were used to confirm the consistency of the stock spore suspension and verify that a single spore gave rise to a single colony. A suspension of 10^8 spores/ml was used for all lysis experiments described below.

Ten-fold serial dilutions of spore suspension were prepared in sterile water within two hours of all lysis experiments. Three ×20 μl aliquots were spotted directly onto trypticase soy agar (Difco, Detroit, Mich.) plates and incubated at 30° C. for 36 hours. All lysis and plating experiments were performed in triplicate, resulting in at least 9 data points (spore counts) for each treatment. Lysis efficiency was calculated as $100\times(C_o\text{-}C_{lysis})C_o$; where C_O is the viable spore count before lysis and C_{lysis} is the viable spore count after lysis.

The original spore preparation had significant quantities of adsorbed deoxyribonucleic acid (DNA) on the spore coat that interfered with polymerase chain reaction (PCR) detection of intracellular or liberated BG DNA. Eight hundred microliter aliquots of BG spores were collected by centrifugation and resuspended in 200 μl 10% sodium hypochlorite for 1–10 minutes. After this decontamination, spores were recovered by centrifugation, washed extensively in sterile water, and then subjected to on-line lysis (described in the experiments below) and PCR amplification. Control lysis experiments showed that the hypochlorite treatment had no effect on cell lysis efficiency, spore viability, or carryover of PCR inhibitors.

DNA availability after spore lysis was assessed by a dilution-to-extinction PCR method. Genomic DNA was isolated from BG spores by bead-mill homogenization and quantified by ultraviolet spectrophotometry. PCR primers Bg215f and Bg325r were provided by Navy Medical Research Institute and synthesized by Keystone Labs (Camarillo, Calif.). PCR amplification was carried out in 25 μl total volume, utilizing an MJ Research (Watertown, Mass.) Tetrad thermal cycler and 0.2 ml thin-walled reaction tubes. Spore preparations (lysed or unlysed) were serial diluted in a 10-fold series immediately prior to PCR, and purified BG DNA was serially diluted in PCR-grade water at 100 pg to 1 fg μl-1 as a positive control template. Final reaction conditions were 5 μl DNA or lysed/unlysed spore preparation, 10 mM Tris pH 8.3, 50 mM KCl, 2.5 mM MgCl2, 200 μM each dNTP, 0.2 μM each primer, 5 μl template DNA or lysed spore suspension, and 0.625 U LD-Taq polymerase (Perkin Elmer, Foster City, Calif.) which had been pretreated with TaqStart™ antibody at the recommended concentration (Sigma, St. Louis, Mo.). Assembled reactions were amplified with 45 cycles at 94° C. for 15 s, 56° C. for 30 s, 72° C. for 30 sec with a 2 s extension per cycle. The entire contents of each PCR were analyzed on 1% NuSieve, 1% Seakem GTG agarose (FMC Bioproducts, Rockland, Me.) gels in 1×TAE running buffer, both containing ethidium bromide, and gel images captured with a BioRad (Hercules, Calif.) Fluor-S imager and Molecular Analyst software.

Experiment 1

Experiment 1 demonstrated that cell lysis can be performed with greater than 99% efficiency using 1 MHz ultrasound both with and without the addition of contrast

agents. FIG. **3** shows an initial static-liquid chamber lysis experiment using 1 MHz ultrasound, whereby the bottom of a standard polypropylene microfuge tube **300**, containing a 200 microliter suspension of BG, was held in place in a water bath **308** in the sonic field **304** produced by the transducer **312** in an ultrasonic humidifier **316**. The angle of the microfuge tube, θ, was set to zero (i.e., the tube was vertical) for this particular experiment. The specific humidifier **316** was a Holmes Ultrasonic humidifier, model HM-460B, ca. 10 W/cm^2 peak power. Sixty milligrams of 50 micron glass microspheres and 40 micrograms of paramagnetic particles were added (in separate subexperiments) to help induce cavitation and/or enhance collision rates.

Though this experiment did not utilize a flowing liquid, the results, shown in Table 1 below, clearly indicate that cell lysis can be obtained in a MHz sonic field. The presence or absence of microparticles had no appreciable effect on spore lysis efficiency or in-tube temperature, suggesting that the added microparticles were neither acting as an energy sink nor microbubble source during the course of the experiment. This system also caused up to a 5-log reduction in cell viability for vegetative *Escherichia coli, Bacillus aetrophaeus* and *Bacillus thuringiensis kurstaki cells,* with extensive cellular damage as determined by light microscopy. All subsequent experiments were therefore performed without microparticles, as would be advantageous in an automated biomonitoring system.

TABLE 1

Percent lysis efficiency of BG spores in a static liquid vertical chamber using MHz ultrasound.

4 × 30 sec with:	% Lysis Efficiency	In-Tube Average Temp. (° C.)
No Beads	99.4	104
Glass Beads	99.6	104
Magnetic Beads	99.1	103

Experiment 2

The first "flow-through" sonic device experiment is illustrated in FIG. **4**, whereby the same humidifier **316**, transducer **312**, and water bath **308** as that of experiment 1 was used. In experiment 2, however, a reaction tube **202** made of 3.2 mm OD×1.5 mm ID TEFLON® (i.e., polytetrafluoroethylene, TEFLON is a registered trademark of E.I. Dupont de Nemours and Company) and one made of 3.2 mm OD×1.5 mm ID polyetherethylketone (PEEK) chromatography tubing were used in two separate subexperiments. Note that in this experiment, the water bath **308** functions as the reaction tube coupler **204** of FIG. **2**. The reaction tube **202** was connected to a standard sequential injection system (FiaLab 3000, Alitea, USA) that included a 1 ml syringe pump (Cavro, Sunnyvale, Calif.) and a 10-port selection valve (Valco, Cheminert, Houston, Tex.). The flow injection system delivered a continuous flow (at 1 μl/s and 5 μl/s) of BG spore suspension through the reaction tube **202** that was partially immersed in the 1 MHz sonic field **304** produced by the transducer **312**. As shown in FIG. **4**, the sonic field **304** encompassed a line segment **106** (not shown for clarity) coincident with the flow path **108** in the trough region of the reaction tube **202**. The line segment **106** was approximately 5 mm in length, resulting in 0.5 to 2.5 second exposure of spores to the sonic field as opposed to the 1 to 2 minutes of exposure employed in the previous batch experiment 1. Also introduced were 15 μl air segments every 10 μl of spore suspension to mimic the air/liquid interface present in experiment 1. In all cases, the total volume of spore suspension processed was 200 μl.

Results from this experiment are shown in Table 3 below, which demonstrate that a MHz sonic field can effect spore lysis in a near-instantaneous manner. Air segmentation appeared to significantly enhance lysis efficiency in the TEFLON tubing, but this interaction was not pursued because TEFLON tubing melted during the course of the trials (40–200 seconds continuous power). PEEK tubing, on the other hand, withstood the sonic energy and maintained in-tube temperatures near 100° C., but air segmentation had little effect on lysis efficiency. Control plating experiments (no lysis) showed that BG spores were not retained within the fluidics system, such that all plate counts associated with Table 3 reflect treatment effects on BG spores rather than cross-contamination and carryover between lysis trials. All further experiments were conducted in PEEK tubing in the absence of any air segmentation or microbubble amendments, again compatible with a field deployable and automated biomonitoring system.

TABLE 3

Percent lysis efficiency of BG spores in a flow-through MHz lysis experiment.

	No Air	Plus Air
	TEFLON TUBING	
1 μl sec^{-1}	82.4	99.3
5 μl sec^{-1}	21.2	72.0
	PEEK TUBING	
1 μl sec^{-1}	90.4	88.9

Experiment 3

The previous two experiments show that the liquid residence time in the sonic field is an important variable for effective cell lysis. Consequently, a device wherein the sonic energy is concentrated along a line segment **106** throughout the entire length of the transducer(s) **104** was developed as shown in FIGS. **5**A–**5**B.

The transducer(s) **104** was a commercial 1.48 MHz cylindrical piezoelectric element shown in FIGS. **6**A–**6**B and placed in high density foam **600** to absorb the energy radiating outward from the diameter of the transducer(s) **104**. A Hewlett Packard 33120A 15 MHz function/arbitrary waveform generator was used and frequency was monitored with an ENI A-300 RF power amplifier and Tektronix TDS 460-A 4 channel digitizing oscilloscope. It was presumed that such a symmetrical configuration would provide a high-intensity field along the line segment **106** (i.e., along the longitudinal axis of the transducer(s) **104**) for subsequent processing of a fluid flowing along the line segment **106**.

The entire configuration was immersed in water. When power was applied to the transducer(s) **104**, only a small amount of acoustic activity was observed near the ends of the transducer(s) **104**. While ultrasonic pressure may have been developed along the line segment **106**, no acoustic streaming was observed and it did not appear to provide sufficient sonic energy desired for lysis. This is understandable based on the effect of acoustic wave cancellation caused by the symmetry of the device.

Experiment 4

Whereas the previous experiment demonstrated unsatisfactory sonic energy with a symmetrical configuration, an asymmetric configuration (shown in FIGS. **7**A–**7**B) was demonstrated to provide sufficient energy. In this embodiment, the device **100** used a transducer(s) **104** in the form of a partial cylinder representing less than half the full cylinder used in experiment 3. Based on the results of experiment 3, if the cross-sectional arc a is greater than 180°, the sonic field generated would oppose itself at the opposite side of the cylinder and decrease the field intensity along the longitudinal axis of the transducer(s) **104**. Therefore, the transducer(s) **104** was fabricated from a section of the commercial 1.48 MHz cylindrical piezoelectric element (FIGS. **6**A–**6**B) with a cross-sectional arc, α, equal to 160° (FIGS. **7**A–**7**B). The transducer(s) **104** was placed in high density foam **600** to absorb the energy radiating outward from the diameter of the transducer(s) **104**. This asymmetric geometry was used to concentrate sonic energy along the line segment **106** coinciding with the longitudinal axis of the reaction tube **202**. The reaction tube **202**, made of 3.2 mm OD×1.5 mm ID PEEK tubing, was positioned approximately at the central axis of the transducer(s) **104**. In such a configuration, liquid residence time and temperatures in the reaction tube **202** are a function of flow rate, and incident sonic energy a function of power, frequency, and distance from the transducer(s) **104**. Temperatures in the reaction tube **202** were recorded with a thermocouple (not shown). Acoustic power intensity was measured at various points in the sonic field with a calibrated pin transducer (not shown).

The entire configuration was immersed in water (serving as the reaction tube coupler **204**, not shown) to acoustically couple the transducer(s) **104** to the reaction tube **202**. Under the proper driving power, this configuration gave excellent lysis results. Two hundred microliter aliquots of spore suspension were flowed through the reaction tube **202** at 1 μl sec^{-1} at variable power (700, 800, 900 and 1000 mV) and at variable distances between the reaction tube **202** and transducer(s) **104**. Lysis efficiencies of greater than 99% were obtained with this device, with sample temperatures staying at or below 106° C. as shown in Table 4 below.

TABLE 4

Percent lysis efficiency and sample temperature as function of power input.

Distance	Power (mV)	% Lysis	In-tube Temp. (° C.)
15 mm	700	99.7	78–101
	800	99.9	100–101
	900	99.8	100–101
	1000	99.2	100–102
20 mm	700	99.6	95–103
	800	99.3	95–104
	900	97.7	101–106
	1000	97.6	101–105
26 mm	700	88.3	45–72
	800	97.8	80–92
	900	99.7	95–101
	1000	99.9	99–101

The sonic field was highly concentrated along the line segment **106** of the device **100** except at the ends where the edge effect of the transducer(s) **104** gave a typical high peak. Measurement of acoustic emissions with a pin transducer failed to show characteristic cavitation noise, supporting a non-cavitation, non-thermal mechanical lysing mechanism. Since there is no correlation between in-tube temperature and lysis efficiency, these results suggest that a continuous-flow, low-temperature, high-efficiency lysis system can indeed be constructed with judicious selection of transducer(s) **104** and physical geometry.

Experiment 5

An experiment was also conducted to compare lysis efficiency obtained using degassed and standard liquid solutions. The device **100** of experiment 4 was used and the spore solution was passed through the reaction tube **202** positioned 15 mm above the transducer(s) **104**. 200 μl of the spore solution was processed at a flow rate of 1 μl/s. The data, shown in Table 5, shows that greater than 98% lysis efficiency was achieved for both standard and degassed solutions exposed to two different sonic field intensities. Since the removal of bubbles in the degassed solution did not significantly decrease the lysis efficiency, this result further supported the hypothesis that cavitation is not the primary mechanism of spore lysis in the device **100**.

TABLE 5

Percent spore lysis efficiency obtained in degassed and standard solutions.

Degassed	Power (mV)	% Lysis
yes	700	98.6
no	700	99.2
yes	800	99.3
no	800	99.6

CLOSURE

While embodiments of the present invention have been shown and described, it will be apparent to those skilled in the art that many changes and modifications may be made without departing from the invention in its broader aspects. The appended claims are therefore intended to cover all such changes and modifications as fall within the true spirit and scope of the invention.

We claim:

1. An apparatus for ultrasonically treating a liquid in a flow path, the device comprising:

a. at least two ultrasound-producing transducers positioned asymmetrically about a line segment, said at least two transducers producing a concentrated sonic field encompassing said line segment;

b. a sonic coupler that acoustically couples said at least two transducers to the liquid in a flow path over the length of said line segment; and

c. a power supply for said at least two transducers.

2. The device of claim **1**, wherein said at least two transducers concentrate sonic energy along said line segment.

3. The device of claim **1**, wherein said line segment is straight.

4. The device of claim **1**, wherein said line segment is curved.

5. The device of claim **1**, wherein said at least two transducers are selected from the group consisting of piezoelectric, magnetorestrictive, and combinations thereof.

6. The device of claim **1**, wherein said at least two transducers are planar.

7. The device of claim **1**, wherein said at least two transducers are concave.

8. The device of claim **1**, wherein said at least two transducers comprise a partial cylinder having a cross-sectional arc of less than 360°.

9. The device of claim **8**, wherein said cross-sectional arc is less than 180°.

10. The device of claim **1**, wherein the liquid is a single-phase liquid.

11. The device of claim **10**, wherein said single-phase liquid is biological.

12. The device of claim **1**, wherein the liquid is a liquid-solid mixture selected from the group consisting of suspension, dispersion, slurry, colloid, biological tissue, and combinations thereof.

13. The device of claim **1**, wherein the liquid is a liquid-solid mixture comprising biological material selected from the group consisting of microorganisms, cells, viruses, tissues, and combinations thereof.

14. The device of claim **1**, wherein the liquid comprises a petrochemical.

15. The device of claim **1**, wherein said at least two transducers operates at a frequency in the range from 0.5 to 5 MHz.

16. The device of claim **1**, wherein said sonic coupler is made of a material with an acoustical impedance value between the acoustical impedance of the liquid and that of said at least two transducers.

17. The device of claim **16**, wherein said sonic coupler is made of a material with an acoustical impedance value approximately equal to the geometric mean of the acoustical impedances of the liquid and said at least two transducers.

18. The device of claim **1**, wherein said sonic coupler is made of a material selected from the group consisting of metal, ceramic, glass, mineral, and combinations thereof.

19. The device of claim **18**, wherein said sonic coupler is made of a machinable ceramic.

20. The device of claim **19**, wherein said machinable ceramic is selected from the group consisting of glass-mica, boron-nitrate, aluminum silicate, alumina bisque, and combinations thereof.

21. The device of claim **1**, wherein said sonic coupler comprises:

a. a reaction tube that provides the flow path for the liquid; and

b. a reaction tube coupler that acoustically couples said reaction tube to said at least two transducers.

22. The device of claim **21**, wherein the reaction tube is made of a material comprising a plastic.

23. The device of claim **21**, wherein the reaction tube coupler is a liquid.

24. The device of claim **23**, wherein said liquid comprises water.

* * * * *