US008636966B2

(12) **United States Patent**
Soderquist et al.

(10) **Patent No.: US 8,636,966 B2**
(45) **Date of Patent: Jan. 28, 2014**

(54) **COMPOSITIONS AND METHODS FOR TREATING NUCLEAR FUEL**

(71) Applicant: **Battelle Memorial Institute**, Richland, WA (US)

(72) Inventors: **Chuck Z. Soderquist**, Richland, WA (US); **Amanda M. Johnsen**, Richland, WA (US); **Bruce K. McNamara**, Richland, WA (US); **Brady D. Hanson**, Richland, WA (US); **Steven C. Smith**, Richland, WA (US); **Shane M. Peper**, Richland, WA (US)

(73) Assignee: **Battelle Memorial Institute**, Richland, WA (US)

(*) Notice: Subject to any disclaimer, the term of this patent is extended or adjusted under 35 U.S.C. 154(b) by 0 days.

(21) Appl. No.: **13/964,914**

(22) Filed: **Aug. 12, 2013**

(65) **Prior Publication Data**

US 2013/0336854 A1 Dec. 19, 2013

Related U.S. Application Data

(63) Continuation of application No. 12/511,341, filed on Jul. 29, 2009, now Pat. No. 8,506,911.

(51) **Int. Cl.**

C22B 34/34	(2006.01)
C01G 39/00	(2006.01)
C01G 39/02	(2006.01)
G21C 19/42	(2006.01)
G21G 4/00	(2006.01)

(52) **U.S. Cl.**

USPC **423/54**; 423/53; 423/55; 423/56; 423/6; 423/11; 423/16; 423/17; 252/637; 252/638; 976/DIG. 279

(58) **Field of Classification Search**

USPC 423/53, 54, 55, 56, 6, 11, 16, 17; 252/637, 638

See application file for complete search history.

(56) **References Cited**

U.S. PATENT DOCUMENTS

3,083,076	A	*	3/1963	Drobnick et al.	423/9
3,322,679	A		5/1967	Kamemoto et al.	
4,094,953	A	*	6/1978	Hadi et al.	423/2
4,155,982	A	*	5/1979	Hunkin et al.	423/7
4,273,745	A	*	6/1981	Laferty et al.	423/54
4,304,757	A	*	12/1981	Kuehl et al.	423/15
4,366,126	A	*	12/1982	Gardner	423/7
4,375,452	A	*	3/1983	Jan et al.	423/7
4,405,566	A	*	9/1983	Weir et al.	423/15

(Continued)

FOREIGN PATENT DOCUMENTS

WO WO 01/39209 A2 5/2001

OTHER PUBLICATIONS

WO PCT/US2010/039625 IPRP, Jan. 31, 2012, Battelle Memorial Institute.

(Continued)

Primary Examiner — Joseph D Anthony
(74) *Attorney, Agent, or Firm* — Wells St. John P.S.

(57) **ABSTRACT**

Compositions are provided that include nuclear fuel. Methods for treating nuclear fuel are provided which can include exposing the fuel to a carbonate-peroxide solution. Methods can also include exposing the fuel to an ammonium solution. Methods for acquiring molybdenum from a uranium comprising material are provided.
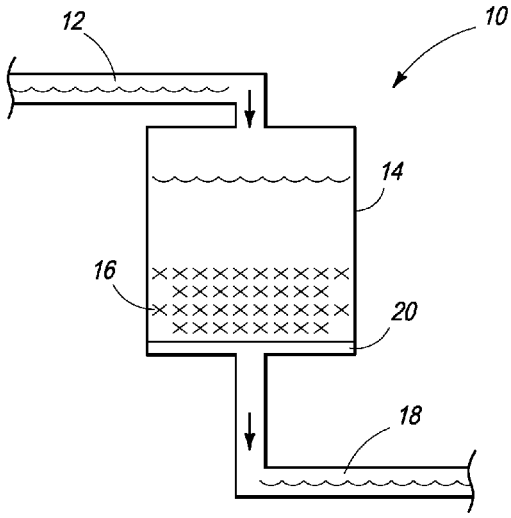
16 Claims, 7 Drawing Sheets