US007176755B2

(12) **United States Patent**
Taubman

(10) **Patent No.: US 7,176,755 B2**
(45) **Date of Patent: Feb. 13, 2007**

(54) **TRANSISTOR-BASED INTERFACE CIRCUITRY**

(75) Inventor: **Matthew S. Taubman**, Richland, WA (US)

(73) Assignee: **Battelle Memorial Institute**, Richland, WA (US)

(*) Notice: Subject to any disclaimer, the term of this patent is extended or adjusted under 35 U.S.C. 154(b) by 0 days.

(21) Appl. No.: **10/757,332**

(22) Filed: **Jan. 13, 2004**

(65) **Prior Publication Data**

US 2004/0145403 A1 Jul. 29, 2004

Related U.S. Application Data

(62) Division of application No. 09/964,953, filed on Sep. 27, 2001, now Pat. No. 6,696,887.

(51) **Int. Cl.**
G06G 7/12 (2006.01)
G06G 7/26 (2006.01)

(52) **U.S. Cl.** **327/560**; 327/432; 327/514; 330/308

(58) **Field of Classification Search** 327/514, 327/333, 432, 560, 561, 427; 330/308, 259, 330/270, 290
See application file for complete search history.

(56) **References Cited**

U.S. PATENT DOCUMENTS

3,369,128 A		2/1968	Pearlman	327/350
3,566,131 A	*	2/1971	Franklin	250/214 R
3,648,051 A	*	3/1972	Weckler	250/214 R
4,097,767 A		6/1978	Blackmer et al.	327/104
4,250,462 A		2/1981	Iwer et al.	330/296
4,409,500 A		10/1983	Welland	327/538
4,498,001 A		2/1985	Smoot	250/214 A
4,574,249 A	*	3/1986	Williams	330/59
4,739,174 A	*	4/1988	Nagano	250/551
4,761,661 A		8/1988	Negishi	347/247
4,771,431 A		9/1988	Nakazawa et al.	372/38
4,819,241 A		4/1989	Nagano	372/38.02
4,882,482 A		11/1989	Smith et al.	250/214 A
4,963,727 A	*	10/1990	Cova	250/214 R
5,113,151 A		5/1992	Yamamoto et al.	372/38

(Continued)

FOREIGN PATENT DOCUMENTS

DE 1 588 321 11/1969

(Continued)

OTHER PUBLICATIONS

Philip C.D. Hobbs, "*Photodiode Front Ends*", Optics & Photonics News, Apr. 2001.

(Continued)

Primary Examiner—Tuan T. Lam
(74) *Attorney, Agent, or Firm*—Klarquist Sparkman LLP

(57) **ABSTRACT**

Among the embodiments of the present invention is an apparatus that includes a transistor, a servo device, and a current source. The servo device is operable to provide a common base mode of operation of the transistor by maintaining an approximately constant voltage level at the transistor base. The current source is operable to provide a bias current to the transistor. A first device provides an input signal to an electrical node positioned between the emitter of the transistor and the current source. A second device receives an output signal from the collector of the transistor.

20 Claims, 5 Drawing Sheets

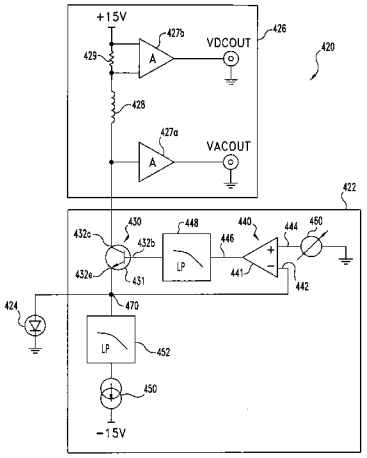

U.S. PATENT DOCUMENTS

5,115,147	A	5/1992	Kusano et al.	327/109
5,123,024	A	6/1992	Dowd et al.	330/308
5,254,957	A	10/1993	Lauffenburger	330/308
5,296,697	A *	3/1994	Moses, Jr.	250/214 R
5,304,793	A	4/1994	Grasset	250/214 A
5,304,949	A	4/1994	Chun	330/296
5,432,474	A	7/1995	Lauffenburger et al.	330/252
5,444,579	A *	8/1995	Klein et al.	360/67
5,463,648	A	10/1995	Gibbs	372/38.02
5,498,865	A	3/1996	Gaboury et al.	250/214 A
5,565,672	A	10/1996	Siegel et al.	250/214 A
5,596,444	A	1/1997	Eguchi	359/210
5,646,560	A	7/1997	Nguyen	327/199
5,724,170	A	3/1998	Aizawa	398/197
5,734,293	A	3/1998	Gross	327/561
RE35,766	E	4/1998	Taguchi	372/38.01
5,736,844	A	4/1998	Yanagisawa	323/282
5,777,517	A	7/1998	Seshita	330/277
5,796,278	A	8/1998	Osborn et al.	327/108
5,796,767	A	8/1998	Aizawa	327/108
5,848,044	A	12/1998	Taguchi et al.	369/53.26
5,864,416	A *	1/1999	Williams	398/202
5,878,015	A	3/1999	Schell et al.	369/116
5,886,374	A	3/1999	Sakamoto et al.	257/292
5,936,986	A *	8/1999	Cantatore et al.	372/38.02
5,970,078	A	10/1999	Walker	372/38.01
6,011,415	A	1/2000	Hahn et al.	327/103
6,021,144	A	2/2000	Meyer et al.	372/38.02
6,026,104	A	2/2000	Itou	372/38.01
6,028,871	A	2/2000	Vaughan et al.	372/38
6,044,095	A	3/2000	Asano et al.	372/31
6,054,901	A	4/2000	Nainar et al.	330/292
6,069,534	A	5/2000	Kobayashi	330/308
6,091,748	A	7/2000	Yasuda	372/38.02
6,111,901	A	8/2000	Taguchi et al.	372/38.02
6,122,497	A	9/2000	Gilbert	455/333
6,271,721	B1	8/2001	Trask	327/560
RE37,524	E	1/2002	Taguchi	372/29.011
6,344,762	B1 *	2/2002	Prentice	327/65
6,392,215	B1	5/2002	Baumgartner et al.	250/205
6,545,540	B1 *	4/2003	Enriquez	330/288
2003/0058034	A1	3/2003	Taubman	327/560

FOREIGN PATENT DOCUMENTS

EP	1 011 193 A1	6/2000
JP	11026849	1/1999

OTHER PUBLICATIONS

K.G. Libbrecht, and J.L. Hall, "*A low-noise high-speed diode laser current controller*", American Institute of Physics, 1993.

* cited by examiner

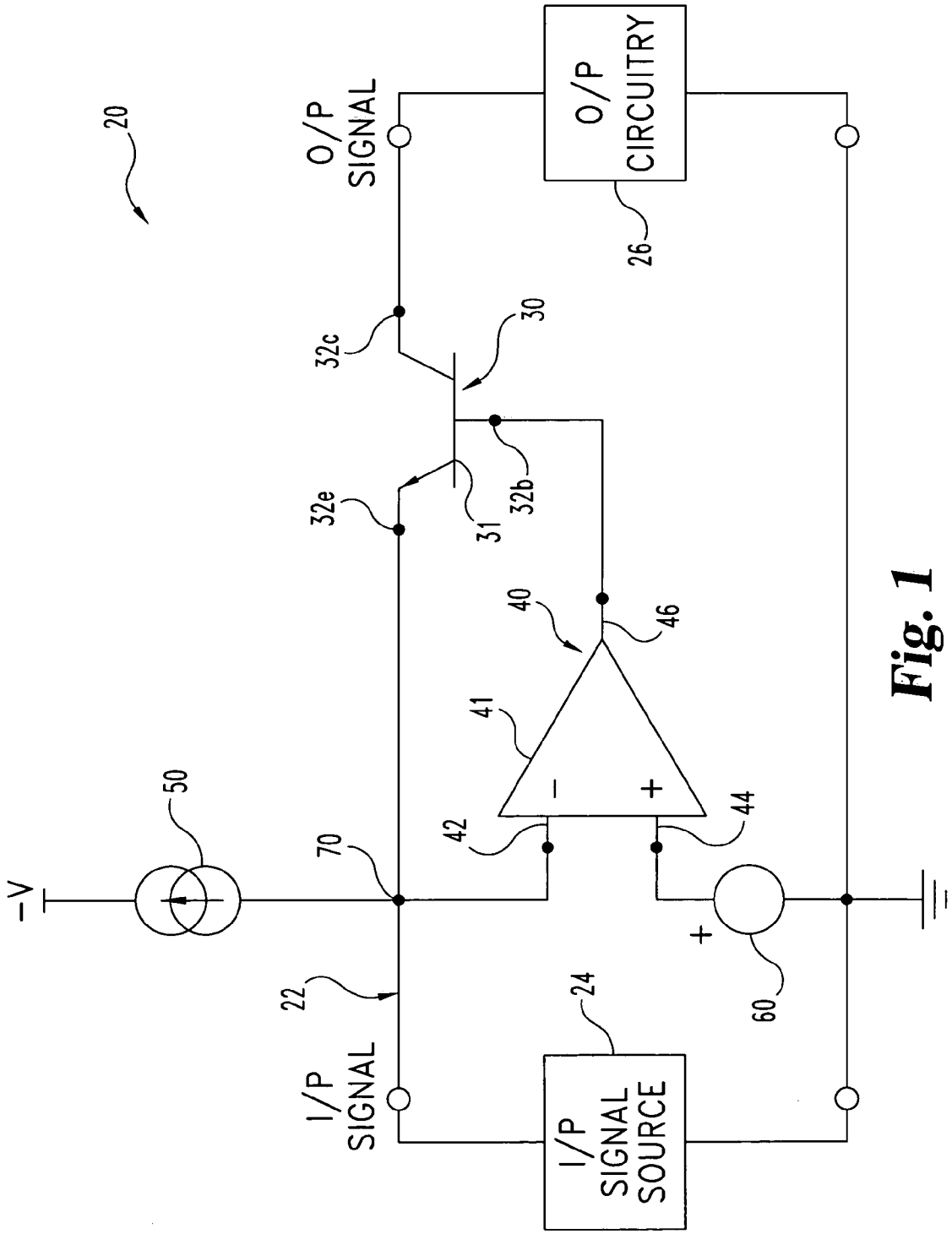
20
O/P SIGNAL
O/P CIRCUITRY
26
32c
30
32e
31
32b
40
46
41
50
-V
70
42
44
22
24
60
I/P SIGNAL
I/P SIGNAL SOURCE

Fig. 1

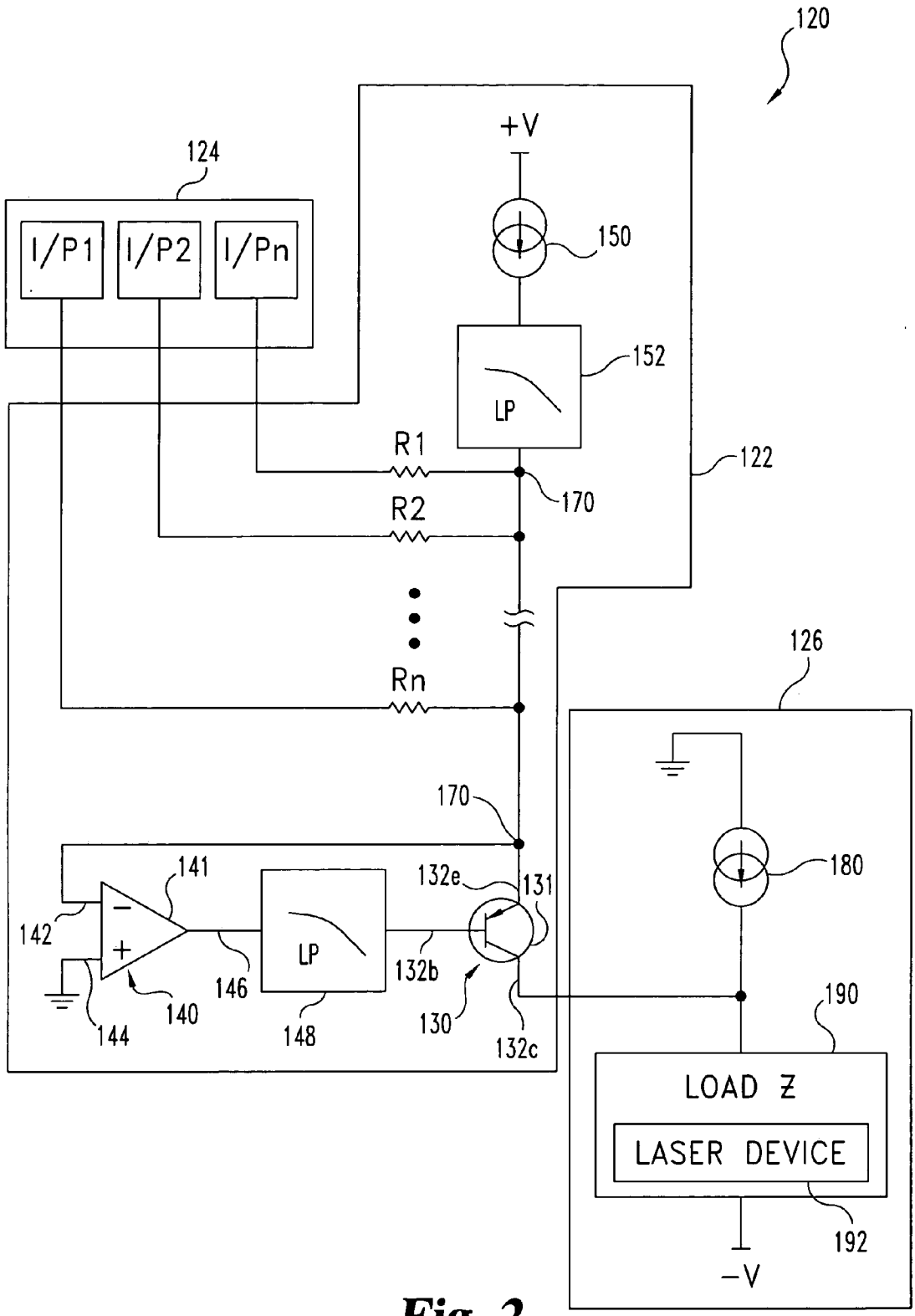
120
+V
124
I/P1
I/P2
I/Pn
150
152
LP
R1
R2
Rn
122
170
126
170
180
141
132e
131
142
LP
132b
146
140
144
148
130
132c
190
LOAD Z
LASER DEVICE
192
−V

Fig. 2

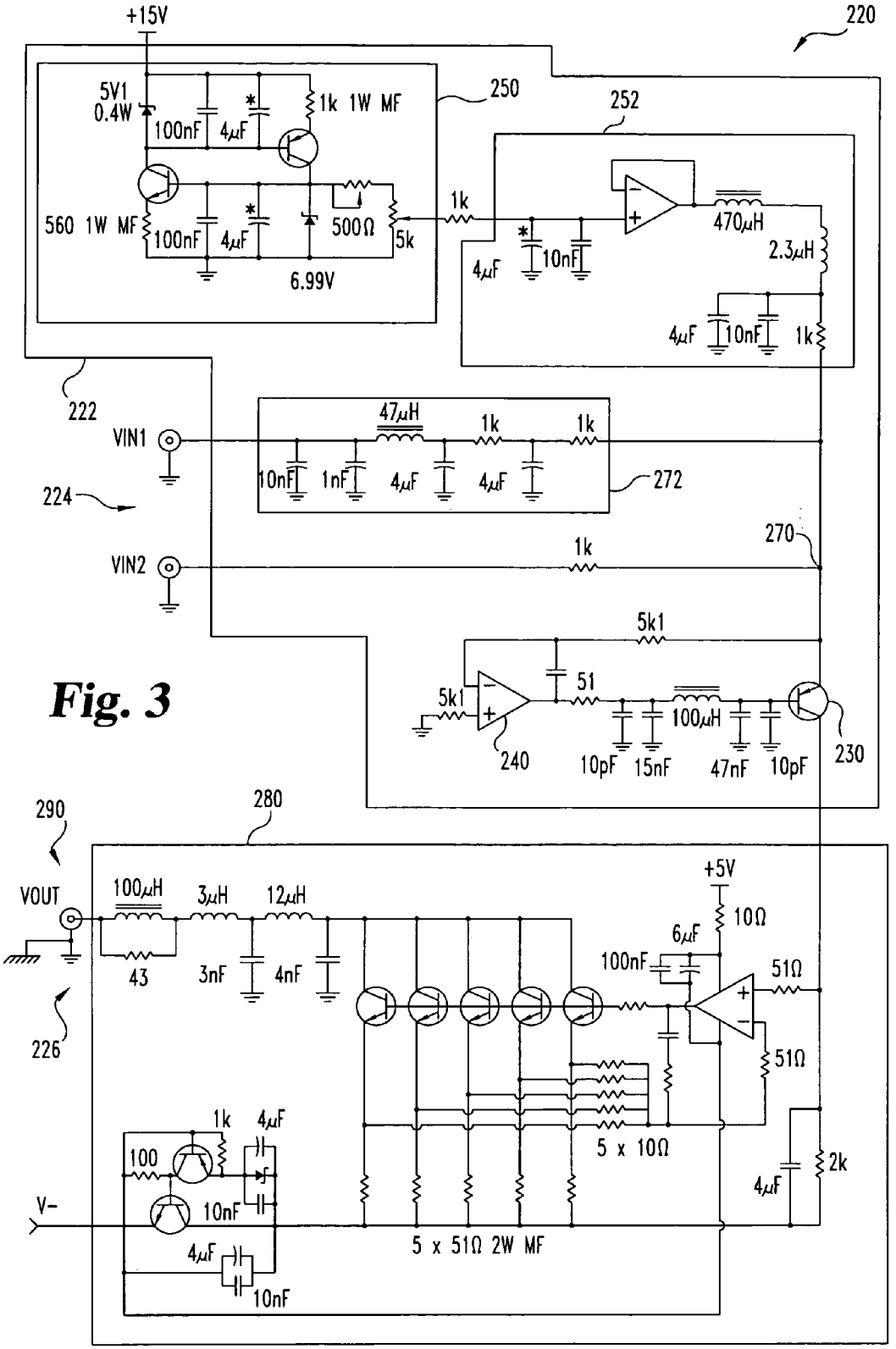
+15V
220
5V1
0.4W
100nF
4μF
1k 1W MF
250
252
560 1W MF
100nF
4μF
500Ω
5k
6.99V
1k
470μH
2.3μH
4μF
10nF
4μF
10nF
1k
222
VIN1
47μH
1k
1k
10nF
1nF
4μF
4μF
272
224
VIN2
1k
270
5k1
51
5k1
100μH
240
10pF
15nF
47nF
10pF
230
290
280
VOUT
100μH
3μH
12μH
43
3nF
4nF
+5V
10Ω
6μF
100nF
51Ω
51Ω
226
1k
4μF
100
10nF
V-
4μF
10nF
5 x 10Ω
5 x 51Ω 2W MF
4μF
2k

Fig. 3

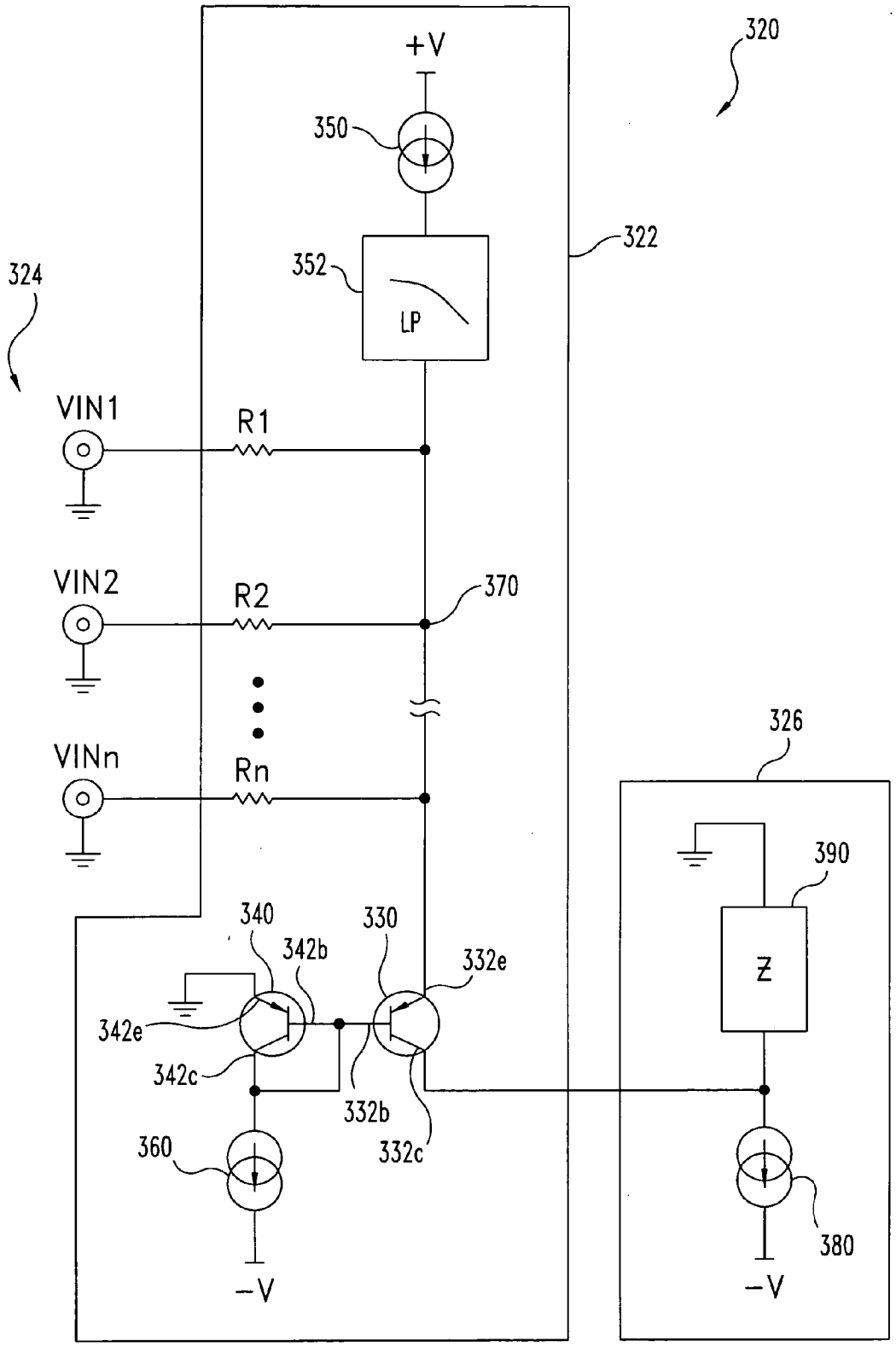
320
+V
350
322
352
LP
324
VIN1
R1
VIN2
R2
370
VINn
Rn
326
390
Z
340
330
342b
332e
342e
342c
332b
332c
360
380
−V
−V

Fig. 4

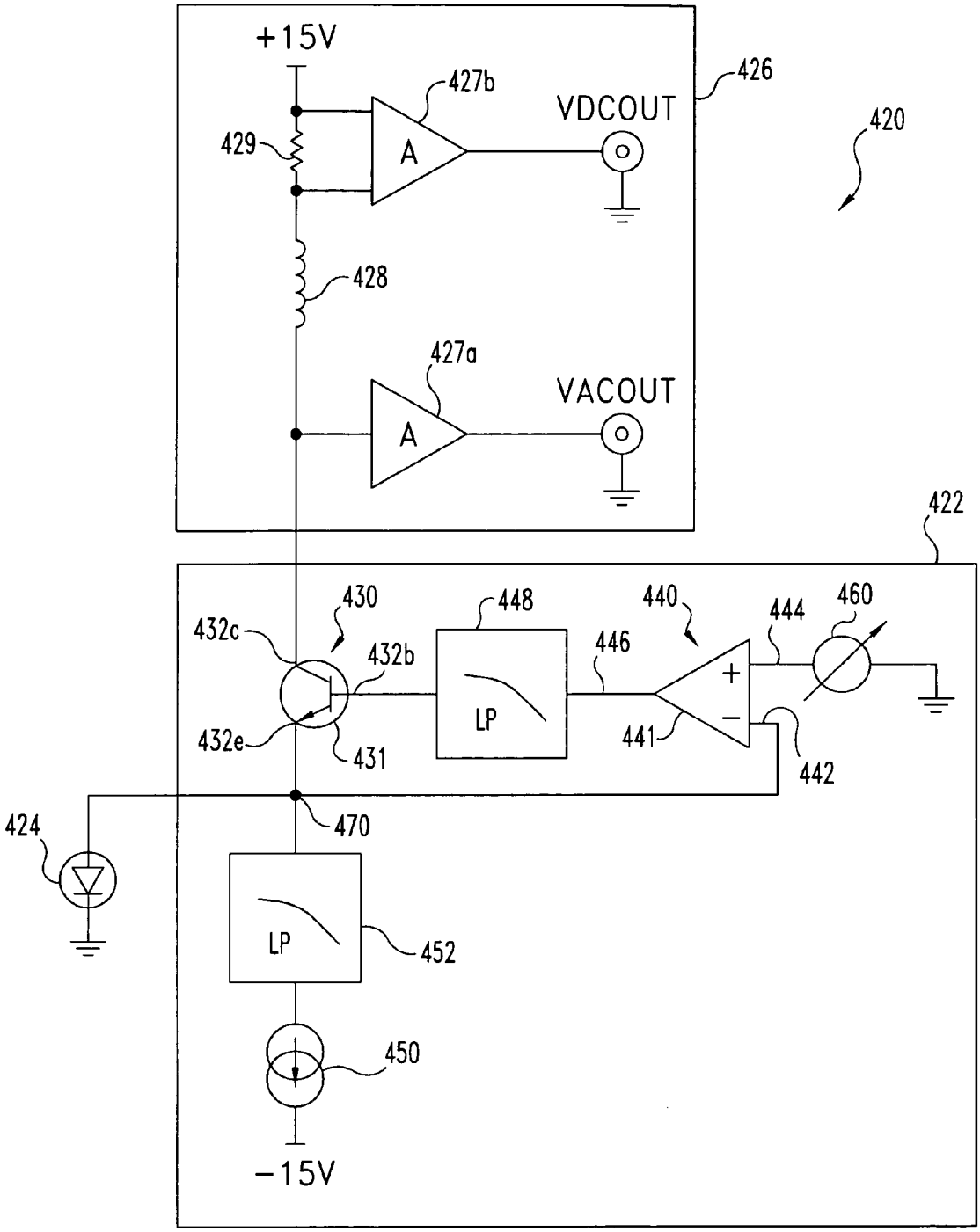
+15V
427b
426
VDCOUT
420
429
A
428
427a
VACOUT
A
422
430
448
440
444
460
432c
432b
446
+
LP
432e
431
441
−
442
424
470
LP
452
450
−15V

Fig. 5

TRANSISTOR-BASED INTERFACE CIRCUITRY

CROSS-REFERENCE TO RELATED APPLICATIONS

The present application is a divisional of U.S. patent application Ser. No. 09/964,953 filed 27 Sep. 2001, now U.S. Pat. No. 6,696,887, which is hereby incorporated by reference.

GOVERNMENT RIGHTS

This invention was made with Government Support under Contract Number DE-AC0676RL01830. The Government has certain rights in the invention.

BACKGROUND

The present invention relates to electrical circuitry, and more particularly, but not exclusively, relates to interface circuits including a transistor.

The ongoing desire for faster circuitry with fewer components has fueled a need for better ways to interface various circuits and circuitry components. Improved interfacing for electro-optical devices, such as photodetectors and laser generating components, is of particular interest. Proposed interface circuits for certain photodectors typically limit the available frequency response and/or signal-to-noise ratio of such devices. In other proposed arrangements, interfaces between certain laser generating components and one or more corresponding input signal sources often include complicated filter networks in an attempt to provide adequate impedance matching. Besides electro-optics, other applications would also benefit from better interfacing. Thus, there is a demand for further advancement in this area of technology.

SUMMARY OF INVENTION

As used herein, "transistor device" broadly refers not only to a single transistor, but also to a transistor combined with one or more other electronic elements to provide an active device that includes at least three terminals. By way of nonlimiting example, transistor device includes multiple transistor combinations, such as two or more transistors connected in parallel, the Darlington configuration, and the Sziklai configuration, to name a few; or different configurations including at least one transistor as would occur to one skilled in the art. Further, as used herein, "transistor" broadly refers to any transistor type, including, but not limited to, a Bipolar Junction Transistor (BJT), Junction Field Effect Transistor (JFET), Insulated Gate Field Effect Transistor (IGFET) (where IGFETs include Metal Oxide Semiconductor Field Effect Transistor (MOSFET) types). Also as used herein, "common base" or "common gate" refers to a transistor device for which input and output signals of interest are each associated with a transistor device terminal other than a base or gate.

One embodiment of the present invention includes a unique interface circuit. Other embodiments include unique circuits, systems, devices, apparatus, and methods for interface circuitry.

In a further embodiment, interface circuitry includes a transistor device in a common base or common gate configuration. This configuration can include a servo device that

receives feedback from one terminal of the transistor device to maintain a relatively constant level at that terminal.

Still a further embodiment of the present invention includes a transistor device in a common base or common gate configuration that amplifies an input signal from a photodetector. A transistor emitter is coupled to the photodetector to receive the input signal and an output is provided from a transistor collector. An operational amplifier can be included with an output operable to drive a transistor base and a negative input coupled to the transistor emitter.

Yet another embodiment of the present invention includes: controlling operation of a transistor device in a common base or gate mode with a servo device; providing negative feedback from a first terminal of the transistor device to a first input of the servo device; providing a selected voltage level to a second input of the servo device; and biasing another device coupled to the first terminal in accordance with the selected voltage level.

Another embodiment of the present invention includes: operating a transistor device in a common base or gate configuration; coupling two or more input signal pathways to the transistor device; and providing an output to another device from the transistor device. In one form, this other device is of a laser-generating type.

For another embodiment, a transistor device includes an emitter, a base, and a collector, that is arranged in a common base configuration to maintain the emitter at a predefined voltage. A number of input signal pathways are coupled to the emitter and a current-dependent load is coupled to the collector. This load is responsive to an input signal received through one of the input signal pathways.

Circuitry of a further embodiment of the present invention includes a transistor device operated in a common base or gate configuration to provide a virtual ground at a first terminal, and a laser device electrically coupled to a second terminal of the transistor device. Operation of the laser device is controlled with one or more input signals provided to the first terminal of the transistor.

Yet a further embodiment of the present invention includes: controlling a common base or common gate mode of operation of a transistor device with a servo device, where the servo device provides an output to the transistor device and receives feedback from the transistor device; applying an approximately constant bias current to the transistor device with a current source; receiving an input signal at an electrical node between a first terminal of the transistor device and the current source; and providing an output signal from the transistor device.

One object of the present invention is to provide a unique interface circuit.

Another object of the present invention is to provide a unique interface circuit, system, device, apparatus, or method.

Further objects, embodiments, forms, features, advantages, benefits, and aspects of the present invention shall become apparent from the detailed description and drawings provided herewith.

BRIEF DESCRIPTION OF DRAWINGS

FIG. **1** is a schematic of an interface circuit of one embodiment of the present invention.

FIG. **2** is a schematic of circuitry of another embodiment of the present invention arranged to interface one or more signals with an electrical load.

FIG. **3** is a schematic showing greater detail of one form of the embodiment shown in FIG. **2**.

FIG. **4** is a schematic illustrating interface circuitry of still another embodiment of the present invention.

FIG. **5** is a schematic illustrating interface circuitry for a photodiode sensor of yet another embodiment of the present invention.

DETAILED DESCRIPTION OF SELECTED EMBODIMENTS

While the present invention may be embodied in many different forms, for the purpose of promoting an understanding of the principles of the invention, reference will now be made to the embodiments illustrated in the drawings and specific language will be used to describe the same. It will nevertheless be understood that no limitation of the scope of the invention is thereby intended. Any alterations and further modifications in the described embodiments, and any further applications of the principles of the invention as described herein are contemplated as would normally occur to one skilled in the art to which the invention relates.

FIG. **1** schematically illustrates circuit **20** of one embodiment of the present invention. Circuit **20** includes interface circuitry **22**, input (I/P) signal source **24** operable to provide an input signal to interface circuitry **22**, and output (O/P) circuitry **26** responsive to an output signal from interface circuitry **22**. Interface circuitry **22** changes various characteristics of the input signal for output to O/P circuitry **26** as compared to the provision of this input signal to O/P circuitry **26** directly from I/P signal source **24**. Interface circuitry **22** includes transistor device **30**, servo device **40**, current source **50**, and voltage source **60**. Signal source **24**, transistor device **30**, servo device **40**, and current source **50** are electrically coupled at a common input node **70** of interface circuitry **22**.

Transistor device **30** is in the form of NPN bipolar junction transistor **31**. Transistor **31** includes base **32***b* electrically coupled to servo device **40**, collector **32***c* electrically coupled to O/P circuitry **26**, and emitter **32***e* electrically coupled to input node **70**. Servo device **40** includes operational amplifier (op-amp) **41** with negative op-amp input **42**, positive op-amp input **44**, and op-amp output **46**. Negative op-amp input **42** is electrically coupled to emitter **32***e* and signal I/P source **24** via input node **70**. Positive op-amp input **44** is electrically coupled to voltage source **60**, and op-amp output **46** is electrically coupled to base **32***b* of transistor **31**.

Current source **50** is coupled to a voltage supply (−V) that is negative relative to electrical ground. Current source **50** provides an approximately constant current with compliance suitable to the particular application. Current source **50** can be arranged to permit for adjustment of the output current level by an operator or otherwise, or can be of a fixed, nonadjustable output variety.

Input signal source **24**, output circuitry **26**, and voltage source **60** are commonly grounded. Voltage source **60** provides a voltage level to positive op-amp input **44** that is positive relative to electrical ground. Voltage source **60** provides an approximately constant voltage output with a degree of regulation suitable for the particular application. Voltage source **60** can be arranged to permit for adjustment of the output voltage level by an operator or otherwise, or can be of a fixed, nonadjustable variety.

During operation, an I/P signal from I/P signal source **24** is applied to emitter **32***e* and a corresponding O/P signal is provided to O/P circuitry **26** from collector **32***c*. Transistor device **30** and servo device **40** are configured to operate in a common base mode such that base **32***b* remains a generally common reference point relative to the V/P signal at emitter **32***e* and the O/P signal at collector **32***c*. Operational amplifier **41** adjust op-amp output **46**, and correspondingly drives base **32***b* to maintain the voltage difference between negative op-amp input **42** and positive op-amp input **44** close to zero. Accordingly, negative op-amp input **42** receives negative feedback from emitter **32***e*, resulting in a voltage level at emitter **32***e* corresponding to that provided to positive op-amp input **44** by voltage source **60**. Furthermore, it should be understood that the electric current drawn by negative op-amp input **42** is relatively low compared to the current flow from emitter **32***e* to collector **32***c* of transistor device **30**. Current source **50** provides an appropriate bias current to maintain transistor device **30** in a generally linear conductive range for the common base configuration.

The common base mode of operation provides a way to isolate reactance characteristics of signal source **24** from O/P circuitry **26** and corresponding provide impedance matching/transformation. Typically, the input impedance of emitter **32***e* is significantly lower than the output impedance of collector **32***c*, which can be desirable for high frequency input signal conditioning and/or signal amplification, among others. When voltage source **60** provides a nonzero voltage to positive op-amp input **44**, node **70** is maintained at a comparable nonzero voltage. This voltage can be used to bias certain passive forms of signal source **40**, such as a sensor or detector. In another arrangement, voltage source **60** can be at a zero level relative to ground, which could be alternatively represented by an electrical short or resistance connection from positive op-amp input **44** to electrical ground. For this arrangement, operational amplifier **41** acts to make the voltage difference between positive op-amp input **44** and negative op-amp input **42** approach zero, so that a virtual ground is realized at input node **70**. This virtual ground arrangement can be used to provide control signals from I/P signal source **24** to O/P circuitry **26** while isolating undesirable characteristics of I/P signal source **24** from O/P circuitry **26**.

FIG. **2** schematically illustrates circuit **120** of another embodiment of the present invention. Circuit **120** includes interface circuit **122**, input signal sources I/P**1**, I/P**2**, . . . I/Pn (collectively designated I/P devices **124**), and output circuitry **126**. Input devices **124** provide signals to output circuitry **126** via interface circuit **122**. Input devices **124** can provide two or more signals simultaneously, such that they are summed together by interface circuit **122**, or signals may be provided by different input devices **124** at different times. While three input devices **124** are shown in FIG. **2**, it should be understood that the ellipse positioned between I/P**2** and I/Pn represents the optional presence of more input devices **124**. In still other embodiments, two or less input devices **124** could be utilized.

Interface circuit **122** includes transistor device **130** and servo device **140** configured for a common base mode of operation. Transistor device **130** includes PNP transistor **131** with base **132***b*, collector **132***c*, and emitter **132***e*. Servo device **140** includes operational amplifier **141** with negative op-amp input **142** coupled to input node **170** and, positive op-amp input **144** at ground. Operational amplifier **141** also includes op-amp output **146** electrically coupled to base **132***b* of transistor device **130** via low pass (LP) filter **148**. Transistor device **130** and servo device **140** operate as described in connection with transistor device **30** and servo device **40** of FIG. **1**. It should be appreciated that positive op-amp input **144** could be tied directly to ground as illustrated, or through a resistor as is commonly desired for many operational amplifier devices. Likewise, low pass filter

148 may not be present, but it can be desired for certain applications to reduce noise and provide a smoother response.

Input node **170** is common to emitter **132***e* and input resistors R**1**, R**2**, . . . Rn. As illustrated, input node **170** is directly connected to negative op-amp input **142**; however, in other embodiments, an interfacing passive component, such as a resistor, or network of passive components could be used to couple input node **170** to negative op-amp input **142**. Bias current is applied to transistor device **130** by current source **150** via a noise reducing low pass filter **152** coupled in series with current source **150**. Current source **150** provides an approximately constant current with a degree of compliance suitable to the particular application. Current source **150** can be arranged to permit adjustment of output current by an operator or otherwise, or can be of a nonadjustable, fixed variety.

O/P circuitry **126** includes current source **180** and load (Z) **190**. Load **190** includes laser generating device **192**. In one form, laser device is of a current-dependent load type, such as a quantum cascade laser, and current source **180** is of a variable type arranged as the main current drive for load **190**. In other embodiments, load **190** and device **192** may be in the form of a laser diode or other laser generator, and/or include a different type of load.

The coupling of positive op-amp input **144** to ground provides a virtual ground at negative op-amp input **142** and correspondingly input node **170**. Signals input to emitter **132***e* from any of input devices **124** are combined and output to load **190** from collector **132***c*. The isolation characteristic of interface circuit **122** permits the combination of signals operating with different voltage supply rails—such that amplifiers operating off a plus/minus five (+/−5) volt supply can be combined with those operating off a plus/minus fifteen (+/−15) volt supply. Additionally or alternatively, high frequency modulation signals for load **190** can be added to other relatively slow-changing control signals without the need for complex interfacing filter networks.

FIG. **3** schematically illustrates circuitry **220** of another embodiment of the present invention. Circuitry **220** includes interface circuitry **222**, two (2) inputs VIN**1** and VIN**2** (collectively designated inputs **224**) that are supplied by sources not shown, and output circuitry **226**. Inputs **224** can be provided by devices such as devices **124** of circuit **120**. Interface circuit **222** includes transistor device **230** and servo device **240** arranged for a common base mode of operation as previously described for transistor device **30** and **130** and servo device **40** and **140** for circuit **20** and **120**, respectively. Interface circuit **222** further includes current source circuit **250** and low pass filter circuit **252** coupled in series to input node **270**. Input node **270** is electrically connected to the emitter of transistor device **230** and coupled to the negative input of servo device **240**. The positive input of servo device **240** is tied to ground via a resistor to provide a virtual ground at input node **270** as explained in connection with circuit **120**. Input VIN**1** is coupled to input node **270** via filter **272** and input VIN**2** is coupled to input node **270** via an input resistor.

Output circuitry **226** includes a current source circuit **280** and load output VOUT (also designated by reference numeral **290**). The output from the collector of transistor device **230** is provided to current source circuitry **280**, which in turn, provides output VOUT to an electrical load (not shown). In one form, VOUT drives a laser device of a current-dependent variety, such as a quantum cascade type. For this form, current source circuitry **280** is arranged to provide a desired load current that is modulated/controlled by signals from inputs **224**. VIN**1** can be a 0–20 control voltage and VIN**2** can be provided as a sweep signal for such a form. This arrangement provides for the input of control signals at inputs **224**, while isolating undesirable reactance characteristics from the load coupled to output VOUT.

FIG. **4** schematically illustrates circuitry **320** of yet another embodiment of the present invention. Circuitry **320** includes interface circuit **322**; inputs **324** (individually designated as VIN**1**, VIN**2**, . . . VINn); and output circuitry **326**. Inputs **324** each provide a signal to output circuitry **326** via interface circuit **322**, and can be supplied by one or more input sources or devices (not shown). Signals from two or more inputs **324** received simultaneously can be summed together with interface circuit **322**. While three inputs **324** are shown in FIG. **4**, it should be understood that the vertical ellipse positioned between VIN**2** and VINn represents the optional presence of more inputs **324**. In other embodiments, two or less inputs **324** can be utilized.

Interface circuit **322** includes PNP transistor **330** arranged for a common base mode of operation in conjunction with PNP transistor **340**. Transistor **330** includes base **332***b*, collector **332***c*, and emitter **332***e*. Transistor **340** includes base **342***b* and collector **342***c* electrically coupled together with base **332***b* of transistor **330**. Transistor **340** also includes emitter **342***e* coupled to ground. Bases **332***b* and **342***b*, and collector **342***c* are commonly coupled to biasing current source **360**. Current source **360** is arranged to provide a biasing current for the operation of the transistor **340**. The interconnection of transistors **330** and **340** maintains input node **370** of interface circuitry **322** (and correspondingly emitter **332***e*) at about the same electrical potential as emitter **342***e*, except for differences that might arise due to different transistor sizes, collector currents, junction temperatures, and the like. Accordingly, a virtual ground is approximated at input node **370** by this arrangement.

Input node **370** is also coupled to input resistors R**1**, . . . ,Rn; and a noise reducing low pass filter **352**. Low pass filter **352** is coupled in series with biasing current source **350**. Current sources **350** and **360** each provide an approximately constant biasing current with a degree of compliance suitable to the particular application. Current source **350** and/or current source **360** can be arranged to permit adjustment of output current by an operator or otherwise, or can be of a nonadjustable, fixed variety.

Output circuitry **326** includes current source **380** and load (Z) **390**. Load **390** can be of a current-dependent type, such as a quantum cascade laser, a different laser generating arrangement, and/or a different load type as would occur to those skilled in the art. The coupling of load **390** to inputs **324** via the virtual ground provided by interface circuit **322** provides a way to interface dissimilar signals, isolate undesirable electrical characteristics, such as reactance, and/or match/convert impedance of desired signals. In one form, circuitry **320** is applied to interface a current-dependent laser generating device with control/modulation signals provided from one or more other devices via inputs **324**.

Still another embodiment of the present invention is schematically illustrated as circuitry **420** in FIG. **5**. Circuitry **420** includes preamplifier **422** for photodetector **424** and output circuit **426**. Photodetector **424** provides a signal indicative of a level of impinging photons. In one form, photodetector **424** is of Mercury-Cadmium-Telluride (MCT) type used for long-wave infrared wavelength detection. In other forms, photodetector **424** can be of a different type, including, but not limited to a silicon-based sensor typically used to detect visible light, an Indium-Galium-Arsenide (InGaAs) type often used for near infrared detection, or such

different type as would occur to those skilled in the art. Interface circuitry **422** includes transistor device **430** coupled to servo device **440** to operate in the fashion previously described in connection with transistor device **30** and servo device **40** of circuit **20**. Transistor device **430** includes PNP transistor **431** with base **432***b*, collector **432***c*, and emitter **432***e*. Servo device **440** includes operational amplifier **441** with negative op-amp input **442**, positive op-amp input **444**, and op-amp output **446**. Op-amp output **446** is coupled to low pass filter **448** to drive base **432***b* of transistor **431**. Emitter **432***e* is coupled to input node **470** to receive input signals from photodetector **424**. Input node **470** is also coupled to negative op-amp input **442** to provide negative feedback. Positive op-amp input **444** is coupled to variable voltage source **460**. Current source **450** and low pass filer **452** are coupled in series to input node **470** to provide an approximately constant biasing current to the transistor device **430** with a current source compliance suitable for the particular application. As explained in connection with circuit **20**, op-amp **441** operates to maintain voltage at node **470** at a value close to that input at positive op-amp input **444** by voltage source **460**. Accordingly, voltage source **460** can be adjusted to provide a desired biasing voltage level for photodetector **424**. Voltage source **460** is regulated to a degree suitable for the particular application and, like current source **450**, can be of a type that is adjustable by an operator or otherwise, or has a nonadjustable, fixed output.

Collector **432***c* provides an amplified output of the input from photodetector **424** to emitter **432***e*. Output circuitry **426** also includes Alternating Current (AC) amplifier **427***a*. An AC voltage input to AC amplifier **427***a* develops across inductor **428**, while also providing for the flow of an appropriate bias current to transistor device **430**. AC amplifier **427***a* of circuit **426** provides an AC output, VACOUT. Output circuitry **426** also includes Direct Current (DC) amplifier **427***b* and sense resistor **429**. The input to DC amplifier **427***b* is developed across sense resistor **429**, such that measurement of the current flow comprised of the bias current through transistor device **430** in addition to the current presented by photodetector **424** can be amplified. DC amplifier **427***b* of circuit **426** provides a DC output, VDCOUT. Signals VACOUT and/or VDCOUT can be further utilized by communications circuitry, sensing circuitry, or such different applications as would occur to those skilled in the art.

The arrangement of circuit **420** provides a bias voltage for photodetector **424** while at the same time isolating its reactance characteristics from output circuitry **426**. In one form, photodetector **424** is of an MCT variety and amplifier **427***a* is of a high frequency, high performance 50 ohm strip line amplifier type such that performance is comparable to the intrinsic capacitance of photodetector **424**. This arrangement finds application in digital communications, among others. In other embodiments, a different type of photodetector and/or amplifier could be utilized. In still other embodiments, a sensor for detecting electromagnetic radiation other than light, a substance, and/or a different property/characteristic could be used instead of or in addition to photodetector **424**.

Referring generally to FIGS. **1**–**5**, it should be appreciated that in other embodiments, instead of a single transistor, a transistor device that combines one or more transistors and/or one or more other active devices, including combinations of two or more transistors, could be utilized. Furthermore, it should be understood that in place of one or more Bipolar Junction transistor (BJT) types illustrated, a Field Effect Transistor (FET) type could be utilized. In such a case, an FET gate is used instead of the base, an FET source is used in place of one of the collector and emitter, and an FET drain is used in place of the other of the collector and emitter. For embodiments utilizing a BJT-based transistor device in a common base configuration or operating mode, an FET-based transistor device can be used instead of the BJT-based transistor device, with such FET-based transistor device correspondingly being in a common gate configuration or operating mode.

In still other forms, a servo device utilized in accordance with the present invention may alternatively or additionally include other types of circuit arrangements in addition to or as an alternative to an operational amplifier. In one such example, a differential input amplifier of discrete components is utilized in place of an operational amplifier. Moreover, in yet other embodiments, different applications and combinations of the circuits shown in the respective embodiments are utilized.

Any theory, mechanism of operation, proof, or finding stated herein is meant to further enhance understanding of the present invention, and is not intended to limit the present invention in any way to such theory, mechanism of operation, proof, or finding. While the invention has been illustrated and described in detail in the drawings and foregoing description, the same is to be considered as illustrative and not restrictive in character, it being understood that only selected embodiments have been shown and described and that all equivalents, changes, and modifications that come within the spirit of the inventions as defined herein or by the following claims are desired to be protected.

What is claimed is:

1. An apparatus, comprising:

a transistor device including a first terminal that is an emitter, a second terminal that is a base, and a third terminal that is a collector, said transistor device being in a common base configuration arranged to maintain said emitter at a predefined voltage;

two or more input signal pathways coupled to said first terminal;

a lowpass filter coupled to the second or base terminal of the transistor device; and

an AC output and a DC output from the third terminal of the transistor device for connection to a load, the AC output being a separate output from the DC output.

2. The apparatus of claim **1**, wherein one of the AC output and the DC output is coupled to a laser diode.

3. The apparatus of claim **1**, wherein one of the AC output and the DC output is coupled to a quantum cascade laser configuration.

4. The apparatus of claim **1**, further comprising an operational amplifier to control said transistor device, said operational amplifier including a negative input coupled to receive feedback from said emitter, a positive input coupled to ground, and an output configured to drive said base.

5. The apparatus of claim **1**, further comprising a different transistor device coupled to said base, said different transistor device including an emitter coupled to ground.

6. The apparatus of claim **1**, further comprising a control signal generator coupled to one of said inputs.

7. The apparatus of claim **1**, further comprising a current source coupled to the emitter.

8. A method, comprising:

operating a transistor device with first, second and third terminals in a common base or common gate configuration;

coupling two or more input signal pathways to a first terminal of the transistor device;

coupling a lowpass filter to a second or base terminal of the transistor device; and

providing an AC output and a DC output from a third terminal of the transistor device for connection to a load, the AC output being a separate output from the DC output.

9. The method of claim **8**, further comprising:

providing a virtual ground at the first terminal of the transistor device through a current path to the virtual ground; and

coupling a current-dependent load to one of the outputs, wherein one of the input signal pathways is from a current source with a lowpass filter, the filter comprising active and passive components.

10. The method of claim **8**, further comprising:

controlling the transistor device with a servo device;

providing a virtual ground at the first terminal of the transistor device through a servo device terminal; and

providing feedback to the servo device from the first terminal of the transistor device.

11. The method of claim **10**, wherein the servo device includes an operational amplifier having a negative input and a positive input, and further comprising:

receiving the feedback through the negative input; and

coupling the positive input to ground.

12. The method of claim **8**, wherein the first terminal corresponds to an emitter, and the third terminal corresponds to a collector, the method further including coupling a different transistor device to the base, the different transistor device including a ground-coupled emitter.

13. The method of claim **8**, wherein the load includes a laser device, and which further includes providing a control voltage to a first one of the input signal pathways and a sweep voltage to a second one of the input signal pathways.

14. The method of claim **8**, wherein the load includes a laser device and wherein one of the two or more input signal pathways is from a first current source, the method further comprising:

supplying an approximately constant bias current to the transistor device from the first current source; and

providing electrical current to the laser device from a second current source.

15. The method of claim **8**, further comprising:

providing a virtual ground at a first terminal of the transistor device, wherein the virtual ground is provided by a servo device terminal, and wherein no reactive components are positioned between the first terminal of the transistor device and the servo device terminal;

wherein one of the input signal pathways is from a current source with a lowpass filter, the filter comprising active and passive components;

electrically coupling a laser device to the third terminal of the transistor device through one of the AC output and the DC output; and

controlling operation of the laser device with an input signal provided to the first terminal of the transistor device.

16. The method of claim **8**, wherein said operating includes controlling operation of the transistor device with a servo device, the servo device receiving feedback from the first terminal.

17. The method of claim **15**, wherein the current source is a first current source, the method further comprising:

supplying an approximately constant bias current to the transistor device from the first current source; and

providing electrical current to the laser device from a second current source.

18. The method of claim **8**, wherein said operating includes regulating operation of the transistor device with a different transistor device having an emitter coupled to ground, the transistor device and the different transistor device having a base connection in common.

19. The method of claim **8**, wherein the transistor device is a first transistor device, wherein the first terminal corresponds to an emitter and the third terminal corresponds to a collector, the method further comprising coupling a second transistor device to the base, the second transistor device comprising a ground-coupled emitter.

20. The method of claim **8**, wherein one of the input signal pathways comprises a photodiode.

* * * * *