US006999174B2

(12) **United States Patent**
Amonette et al.

(10) **Patent No.: US 6,999,174 B2**
(45) **Date of Patent: Feb. 14, 2006**

(54) **PHOTOACOUSTIC SPECTROSCOPY SAMPLE ARRAY VESSELS AND PHOTOACOUSTIC SPECTROSCOPY METHODS FOR USING THE SAME**

(75) Inventors: **James E. Amonette**, Richland, WA (US); **S. Thomas Autrey**, West Richland, WA (US); **Nancy S. Foster-Mills**, Richland, WA (US)

(73) Assignee: **Battelle Memorial Institute**, Richland, WA (US)

(*) Notice: Subject to any disclaimer, the term of this patent is extended or adjusted under 35 U.S.C. 154(b) by 512 days.

(21) Appl. No.: **10/002,602**

(22) Filed: **Nov. 13, 2001**

(65) **Prior Publication Data**

US 2003/0089170 A1 May 15, 2003

(51) **Int. Cl.**
G01N 21/03 (2006.01)
G01N 21/59 (2006.01)

(52) **U.S. Cl.** **356/432**; 356/440; 356/246

(58) **Field of Classification Search** 356/432, 356/436, 440, 246
See application file for complete search history.

(56) **References Cited**

U.S. PATENT DOCUMENTS

4,067,653 A * 1/1978 Fletcher et al. 356/433
4,276,780 A * 7/1981 Patel et al. 73/643

(Continued)

FOREIGN PATENT DOCUMENTS

DE 10004816 A1 8/2001
EP 0 142 481 5/1985

(Continued)

OTHER PUBLICATIONS

Cortese, J., "Technology Improvements are Pushing Microplate Readers into the 21st Century's High–Speed, Computerized World," *The Scientist*, pp. 24–27 (Oct. 2, 2000).
Hamadeh, H. and Afshari, C., "Gene Chips and Functional Genomics: A new Technology Will Allow Environmental Health Scientists to Track the Expression of Thousands of Genes in a Single, Fast and Easy Test," *American Scientist*, vol. 88, pp. 508–515 (Nov.–Dec. 2000).
Saeks, J., "Biochip Market Experiences Explosive Growth," *Genetic Engineering News*, vol. 21, No. 10 (May 15, 2001).
GeneMachines' OmniGrid™ Accent found at www.genemachines.com/OmniGrid/accent.html.
Packard BioScience's SpotArray Enterprise found at www.packardbioscience.com/products/products.asp?content_item_id=332.
Packard BioScience's BioChip Arrayer found at www.packardbioscience.com/products/products.asp?content_item_id=331.
Packard BioScience's SpotArray 24 found at www.packardbioscience.com/products/products.asp?content_item_id=449.
"Listen to Molecules with Pulsed–Layer Photoacoustics," found at www.qnw.com/photoacoustics.htm.
"The Gas Detection Method: Light into Sound," found at www–tracegasfac.sci.kun.nl/whatis.htm.

(Continued)

Primary Examiner—Richard A. Rosenberger
(74) *Attorney, Agent, or Firm*—Klarquist Sparkman, LLP

(57) **ABSTRACT**

Methods and apparatus for simultaneous or sequential, rapid analysis of multiple samples by photoacoustic spectroscopy are disclosed. Particularly, a photoacoustic spectroscopy sample array vessel including a vessel body having multiple sample cells connected thereto is disclosed. At least one acoustic detector is acoustically positioned near the sample cells. Methods for analyzing the multiple samples in the sample array vessels using photoacoustic spectroscopy are provided.

37 Claims, 8 Drawing Sheets

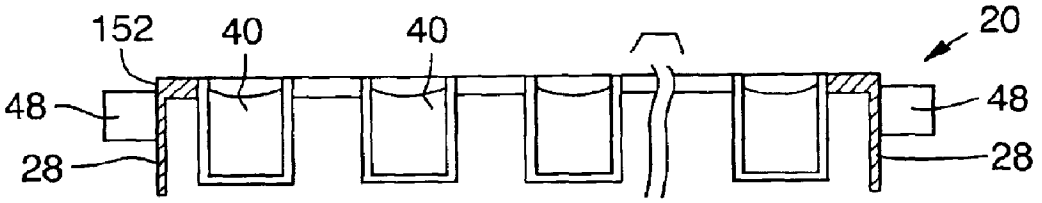

U.S. PATENT DOCUMENTS

4,436,428	A	*	3/1984	Watanabe et al. 356/432
4,738,536	A	*	4/1988	Kitamori et al. 356/441
5,348,002	A		9/1994	Caro
5,479,259	A		12/1995	Nakata et al.
5,492,840	A		2/1996	Malmqvist et al.
6,006,585	A		12/1999	Forster
6,191,846	B1		2/2001	Opsal et al.
6,236,455	B1		5/2001	Autrey et al.
6,244,101	B1		6/2001	Autrey et al.
2002/0017617	A1		2/2002	Schuth et al.

FOREIGN PATENT DOCUMENTS

EP	0 369 176	5/1990
JP	55 010534	3/1980
JP	55 010535	3/1980
WO	WO 92 21973	12/1992
WO	WO 97 49989	12/1997
WO	WO 98 15501	4/1998
WO	WO 01 57498	8/2001

OTHER PUBLICATIONS

Packard Bioscience Company Advertisement, Science, vol. 289, Aug. 18, 2002, Circle No. 16.

Amonette, J.E., Autrey, S.T., Foster–Mills, N.S., Jarman, K.H., Green, D., Norige, M.A. and Bohne, R.D., "Array–Based Photoacoustic Spectroscopy for Environmental and Biomedical Assays," (Mar. 2001).

* cited by examiner

FIG. 1
(PRIOR ART)

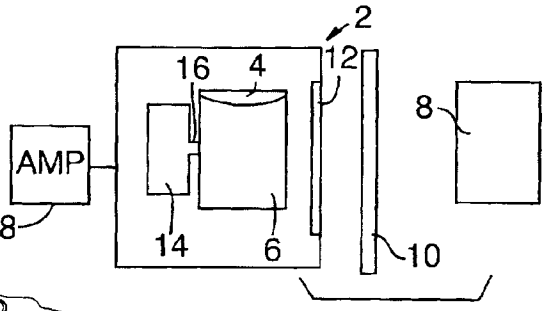

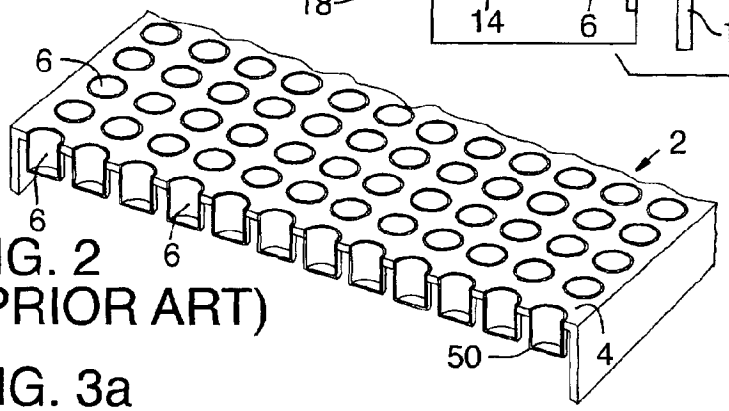

FIG. 2
(PRIOR ART)

FIG. 3a

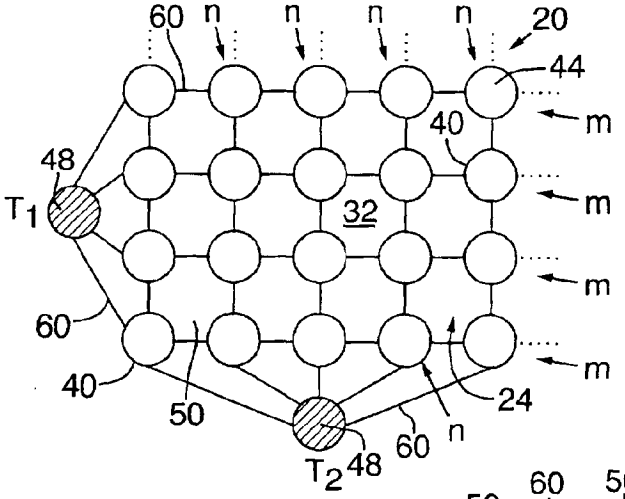

FIG. 3b

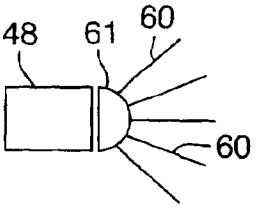

FIG. 4

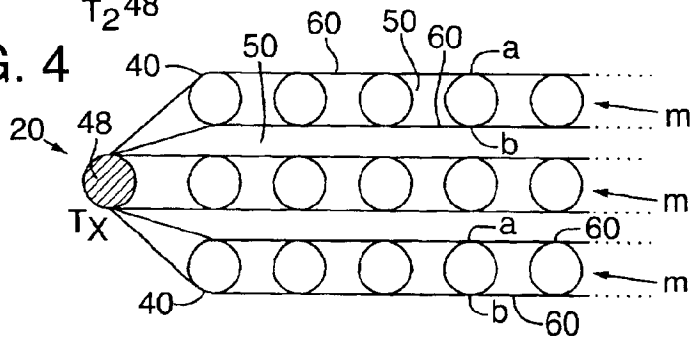

FIG.5

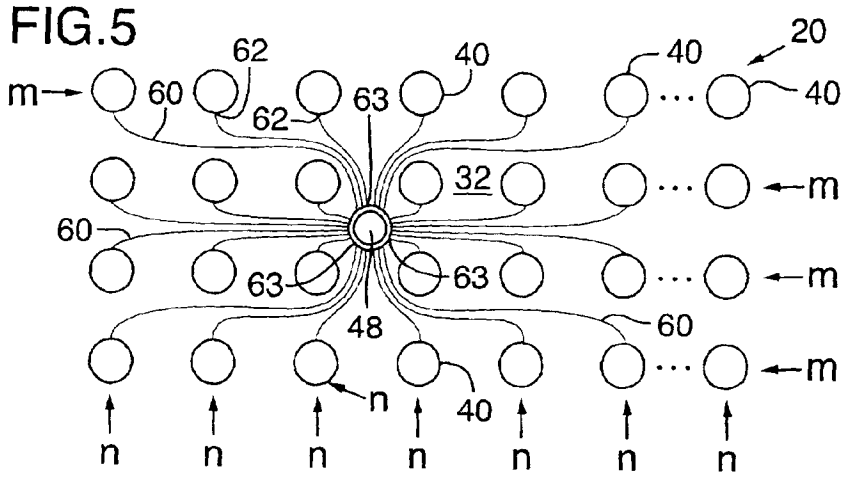

FIG. 6

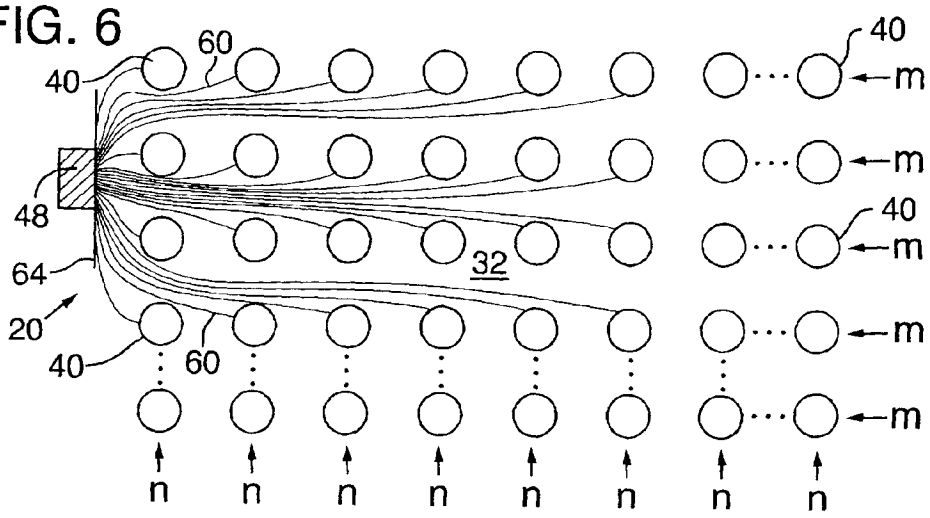

FIG. 7

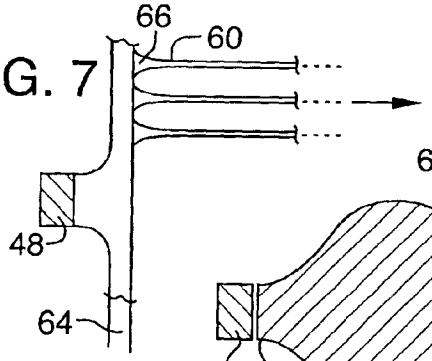

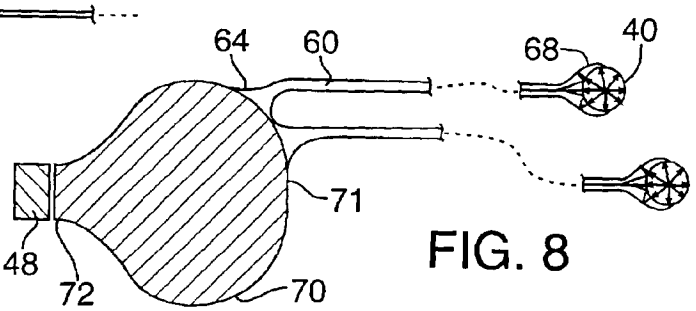

FIG. 8

FIG. 9

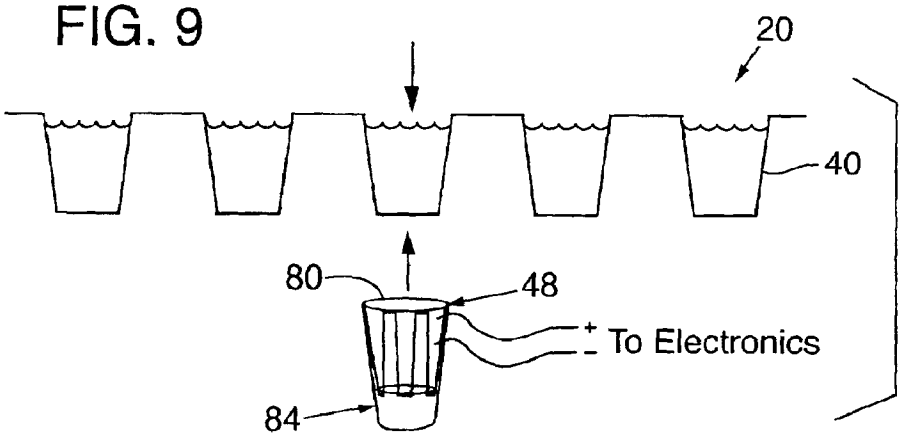

FIG. 10

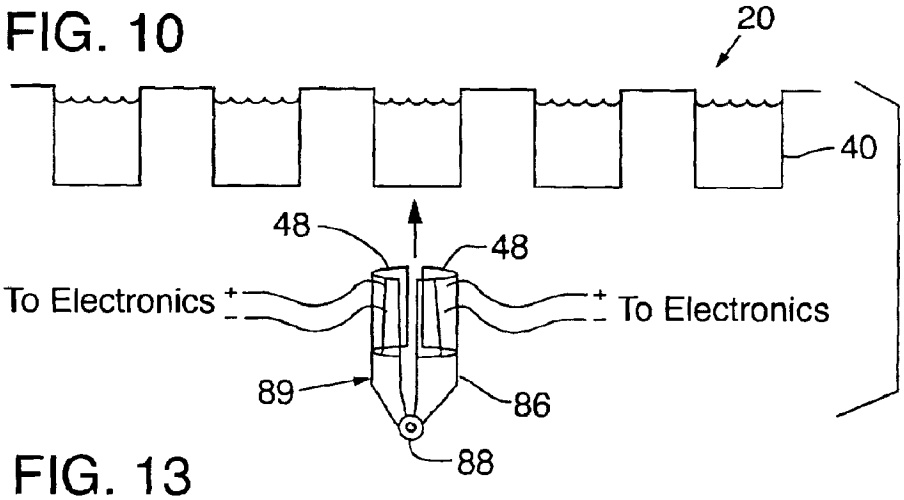

FIG. 13

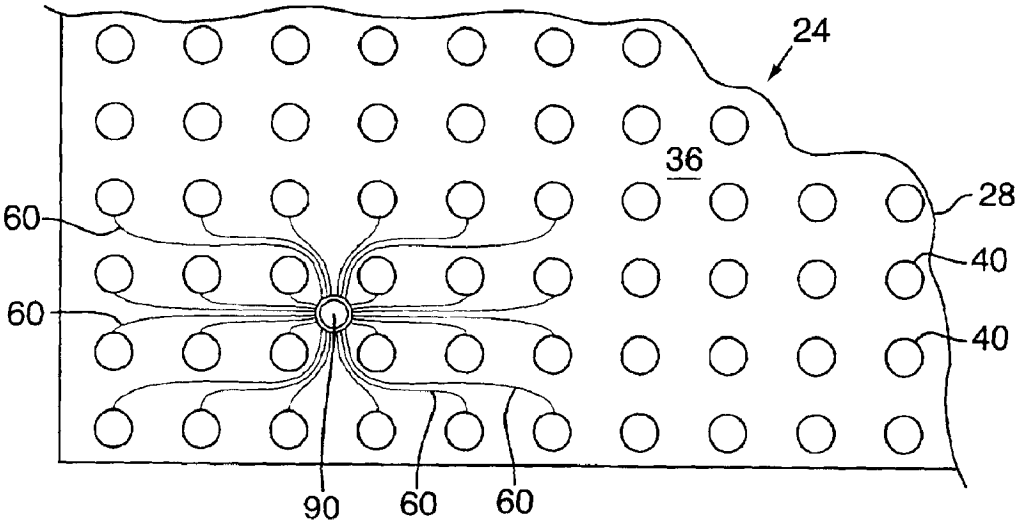

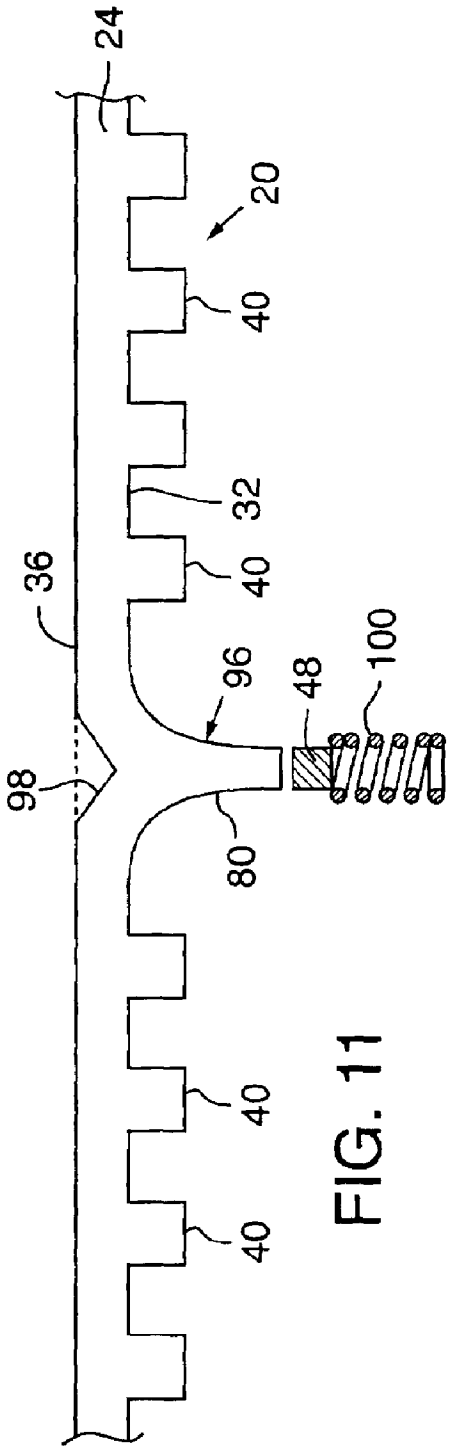

FIG. 11

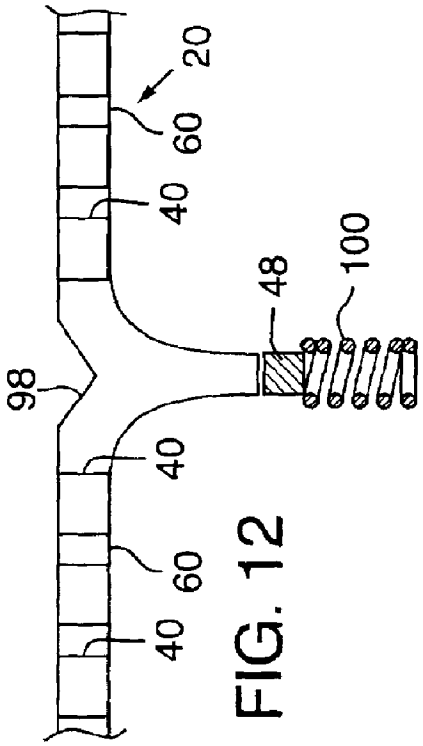

FIG. 12

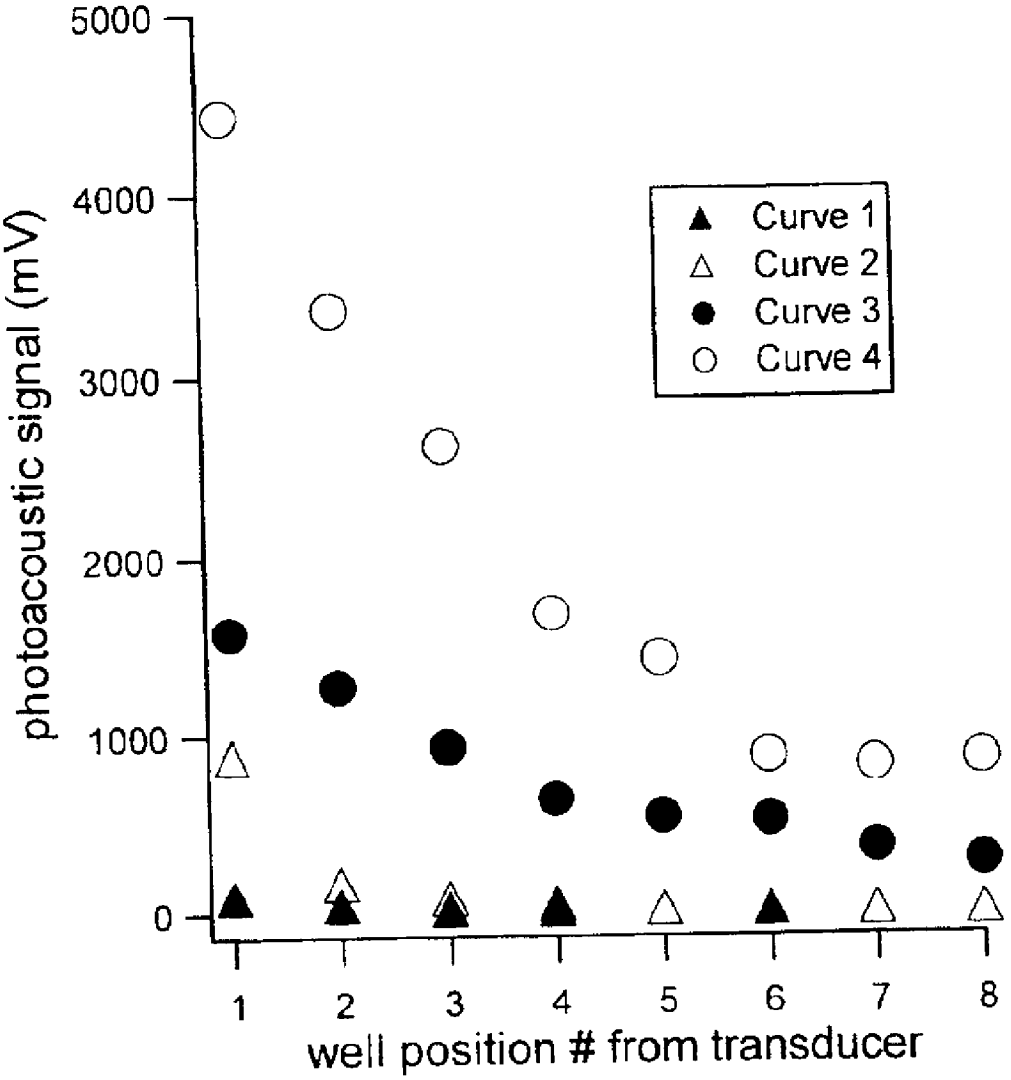
5000
4000
3000
2000
1000
0
photoacoustic signal (mV)
Curve 1
Curve 2
Curve 3
Curve 4
1
2
3
4
5
6
7
8
well position # from transducer

FIG. 14

FIG. 15a

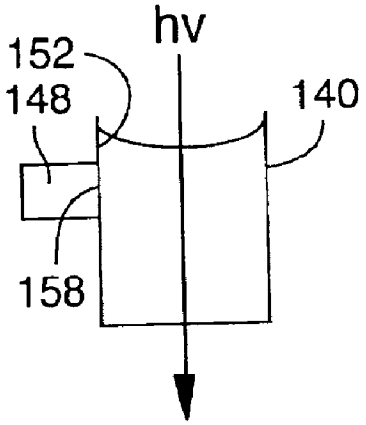

FIG. 15b

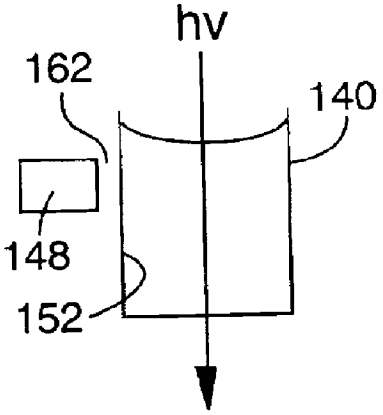

FIG. 15c

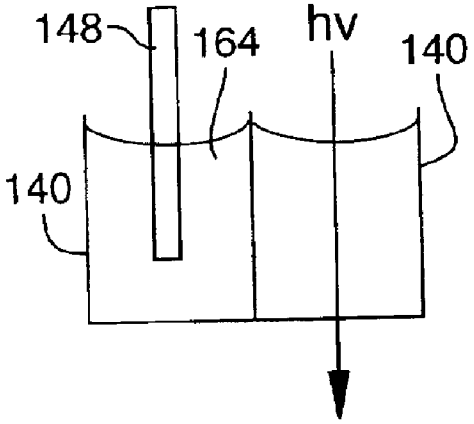

FIG. 16

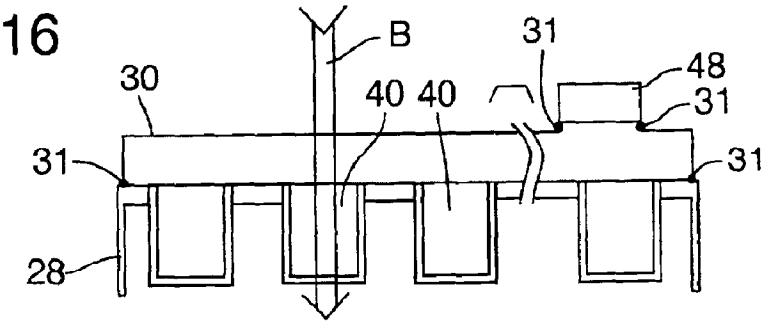

FIG. 17

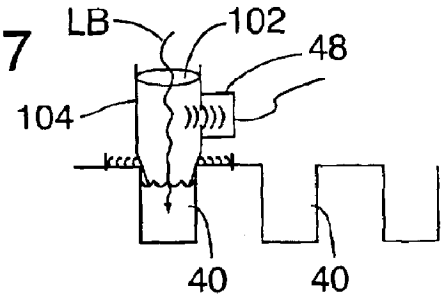

FIG. 18

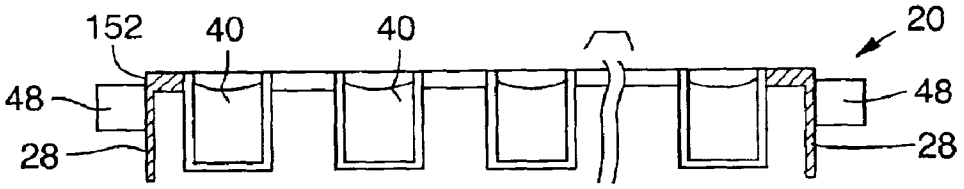

FIG. 19

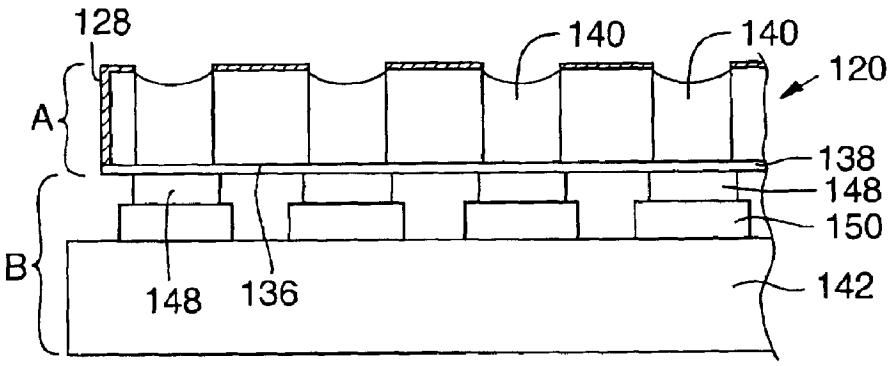

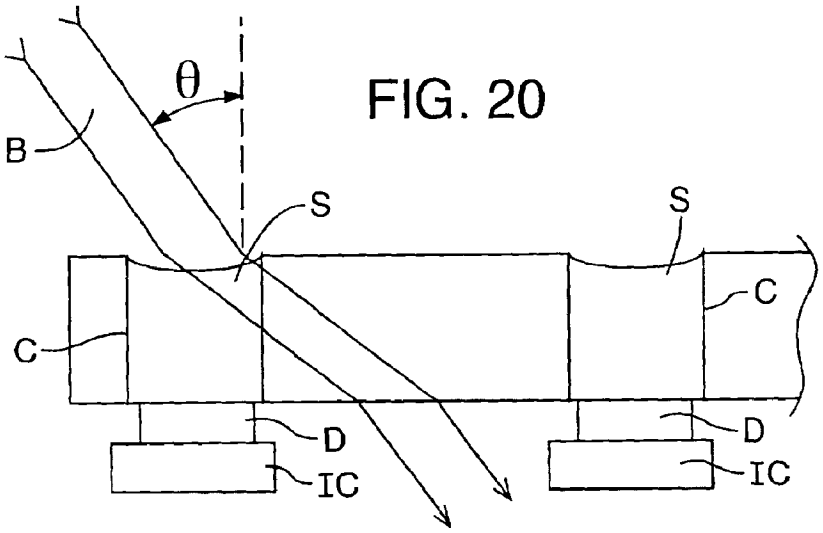

FIG. 20

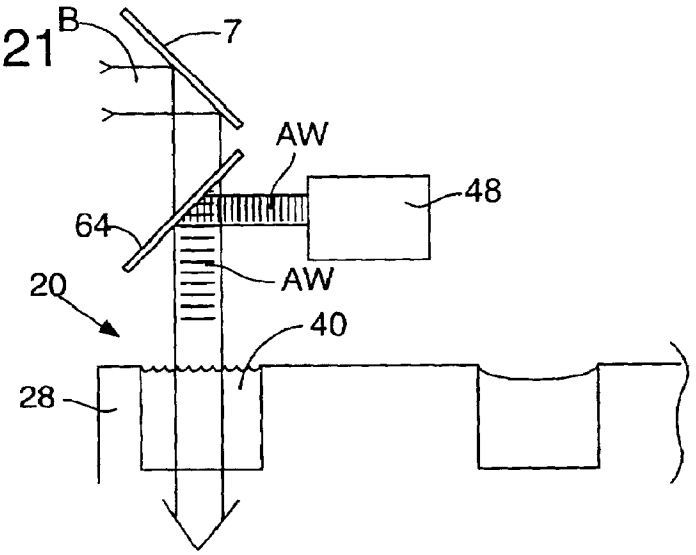

FIG. 21

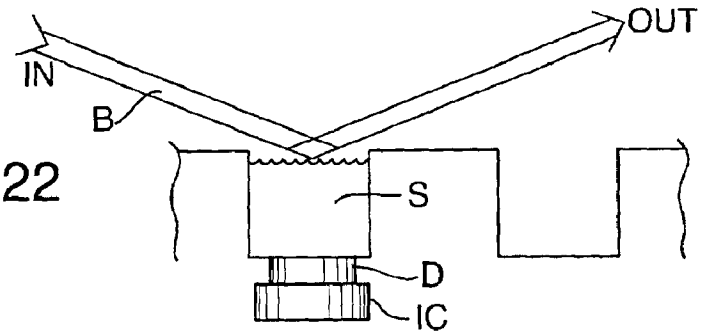

FIG. 22

PHOTOACOUSTIC SPECTROSCOPY SAMPLE ARRAY VESSELS AND PHOTOACOUSTIC SPECTROSCOPY METHODS FOR USING THE SAME

This invention was made with Government support under Contract DE-AC0676RLO1830 awarded by the U.S. Department of Energy. The Government has certain rights in this invention.

FIELD OF THE INVENTION

The present invention relates to photoacoustic spectroscopic sample array vessels and photoacoustic spectroscopic analysis of samples held in such sample array vessels.

BACKGROUND

The science industry, and the bioscience and environmental industries in particular, rely on the analysis of large numbers of samples for various studies. The need for rapid turnaround time coupled with the high costs of labor and chemical waste disposal have resulted in the development of automated array-based techniques that analyze samples using optical spectroscopy. Although these conventional absorption-based techniques are applicable to a wide spectrum of analytes, they have low sensitivity.

The two major types of optical spectroscopy currently used in array-based analysis include absorption spectroscopy and fluorescence spectroscopy. The most common technique is conventional absorption spectroscopy. Light at a given wavelength is transmitted through the sample, and the decrease in intensity relative to the original beam is monitored. The concentration of absorbing substance is determined using the Beer-Lambert law, which requires knowledge of the intrinsic absorptivity of the substance, the path length of light through the sample, and the ratio of incident and transmitted light intensities. Because direct measurement of absorption involves sensing a small decrease in the strength of a high background signal (i.e., the intensity of the unblocked light beam), conventional absorption spectroscopy is a low signal-to-noise technique. As a consequence, it has limited sensitivity (typically on the order of 10^{-3} absorbance units, corresponding to absorption of about 0.2% of the incident light by the sample). This analysis method does, however, have wide applicability. A large number of analytes absorb light with sufficient efficiency to be detected by a decrease in transmissivity.

The other major type of spectroscopy in common use with sample arrays is fluorescence spectroscopy. This technique also relies on absorption of incident light by the sample, but detection is based on the emission of light of lower energy (longer wavelength) as the absorber decays from the excited state. The background signal of the detector, therefore, is zero (except for "dark current" noise in the electronic circuitry), and the signal-to-noise is very high.

The sensitivity of fluorescence depends not only on the absorptivity of the sample, but on the intensity of the incident light and the quantum yield of the conversion of absorbed energy to fluorescent light. Under optimal conditions, fluorescent samples can be measured at a sensitivity of about 10^4 better than conventional absorbance spectroscopy. This sensitivity, however, is achieved at the cost of versatility. Few analytes fluoresce with the yield needed for wide application of the technique. Fluorescence spectroscopy is made practical for non-fluorescing analytes by tagging them with large (e.g., ca. 500 Dalton) fluorescent molecules, thus adding an additional costly step in the overall analysis and possibly altering the chemistry of the analyte in the process.

Although both conventional absorption spectroscopy and fluorescence spectroscopy rely on the absorption of light by the analyte, they differ significantly in their sensitivity and versatility. Absorption spectroscopy is easily applied to a wide variety of analytes, but has inherently poor sensitivity. Fluorescence spectroscopy is sensitive, but only for a limited number of molecules. An array-based analysis technique is needed that combines the strengths of these two spectroscopic approaches to yield both high sensitivity and wide applicability.

Photoacoustic spectroscopy (PAS) is based on the absorption of light energy by a molecule. The signal in PAS, however, is not detected by monitoring the transmittance or emission of light. Instead, in PAS, the signal is monitored by acoustic detection. Specifically, photoacoustic spectroscopy detection is based on the generation of acoustic waves as a consequence of light absorption. Absorption of light by a sample exposed thereto excites molecules in the sample to higher rotational/vibrational/electronic states. Return to the ground state releases the absorbed energy to the surrounding medium, either as light or heat. Collisions of the molecules transfer the rotational/vibrational energy to translational energy, i.e., heat. Modulation of the light intensity (turning the light on and off as the sample is exposed) causes the temperature of the sample to rise and fall periodically. The temperature variation of the sample is accompanied by a pressure variation that creates a sound wave (gas samples must be in a closed volume). The sound wave can be detected with a sensitive microphone.

Conventionally, a sample to be analyzed by photoacoustic spectroscopy is placed in a cuvette or other similar singular sample holder. Although obtaining the advantage of PAS analysis selectivity and sensitivity, the known singular sample analysis is slow and labor intensive. There is some experimental use of PAS to analyze multiple samples, as disclosed in U.S. application Ser. No. 10/061,235, now U.S. Pat. No. 6,870,626. There is also experimental use of PAS analysis utilizing conventional microtiter plates, as disclosed in U.S. application Ser. No. 10/002,624, now U.S. Pat. No. 6,873,415, which application is incorporated herein by reference. There is still a need, however, for development of sample array vessels desired specifically for PAS analysis and for analysis parameter methods desired for PAS analysis of such sample array vessels. Further, there is a need for sample array vessels including acoustic detectors operable with PAS systems and methods that allow for PAS sample analysis using the same.

SUMMARY

Presently disclosed are PAS sample array vessels and methods for PAS sample analysis using the same. More specifically, in one embodiment a PAS sample array vessel comprises a vessel body having at least two sample cells connected to the vessel body. At least one acoustic detector capable of receiving an acoustic signal from at least one sample cell is connected or connectable to the sample array vessel. Preferably, an acoustics enhancing material is formed within spaces between the sample cells to enhance transmission of the acoustic signal from the sample cells to the acoustic detector. In another embodiment, the sample array vessel comprises a body having multiple sample cells for holding samples for PAS analysis, at least one acoustic detector positioned to detect acoustic signals that emanate from a sample in a sample cell and at least one acoustic fin

acoustically connecting at least one sample cell to the acoustic detector such that the acoustic signals are directed to the detector through the acoustic fin. Various different embodiments of the sample array vessel are further described below. Also disclosed are methods for using the sample array vessels for PAS analysis.

BRIEF DESCRIPTION OF THE DRAWINGS

FIG. **1** shows a conventional photoacoustic spectroscopy system.

FIG. **2** is a perspective view of a conventional microtiter plate.

FIG. **3***a* is a partial bottom view of an embodiment of a PAS sample array vessel including acoustic fins connectable to one or more acoustic detectors.

FIG. **3***b* is a partial side view of the embodiment of the sample array vessel shown in FIG. **3***a*.

FIG. **4** is a partial bottom view of an embodiment of a PAS sample array vessel including acoustic fins connectable to one or more acoustic detectors.

FIG. **5** is a partial bottom view of an embodiment of a PAS sample array vessel including directed acoustic fins connectable to one or more acoustic detectors.

FIG. **6** is a partial bottom view of an embodiment of a PAS sample array vessel including directed acoustic fins connectable to a collection bar connectable to one or more acoustic detectors.

FIG. **7** is a partial top view of an embodiment of a collection bar for a PAS sample array vessel (not shown).

FIG. **8** is a partial side view of an embodiment of an acoustic lens for a PAS sample array vessel (not shown).

FIG. **9** is a partial side view of an embodiment of a PAS sample array vessel showing a detachable acoustic detector.

FIG. **10** is a partial side view of an embodiment of a PAS sample array vessel sample cell with a detachable acoustic detector.

FIG. **11** is a partial side view of an embodiment of a PAS sample array vessel showing a detachable acoustic detector.

FIG. **12** is a partial side view of an embodiment of a PAS sample array vessel showing a detachable acoustic detector.

FIG. **13** is a partial top view of an embodiment of a PAS sample array vessel with a post collector connectable to an acoustic detector.

FIG. **14** shows acoustic sensitivities of sample array vessels including differing gap-filling material.

FIGS. **15***a*–**15***c* show alternative acoustic bridge arrangements for embodiments of sample array vessels including one or more acoustic detectors.

FIG. **16** shows an embodiment of a sample array vessel having air-coupled acoustic detection system and a sealing plate.

FIG. **17** shows an embodiment of a sample array vessel with an air-coupled acoustic detection system.

FIG. **18** is a side view of an embodiment of a sample array vessel including one or more side-mount acoustic detectors.

FIG. **19** is a side view of an embodiment of a sample array vessel including an acoustic detector positioned at each sample cell and a reflective plate.

FIG. **20** shows a portion of an embodiment of a sample array comprising a refractive array, each sample cell including a detector positioned thereunder.

FIG. **21** shows an embodiment of a sample array vessel having air-coupled acoustic detection.

FIG. **22** shows a portion of an embodiment of a sample array vessel comprising a reflective array, each sample cell including a detector positioned thereunder.

DETAILED DESCRIPTION

Photoacoustic spectroscopy (PAS) sample array vessels and photoacoustic analysis methods are disclosed. The PAS sample array vessels and methods provide for rapid sequential or simultaneous PAS measurement of multiple samples, in various arrays, e.g., in an n, m matrix. The PAS methods and sample array vessels may be used to analyze gas, liquid, and solid samples for any type of species capable of absorbing incident electromagnetic energy. For example, the sample arrays and PAS analysis methods disclosed herein may be used to speciate various organic and inorganic transition, actinide, and lanthanide metals in solution, biomass fermentation, DNA and RNA, bacteria, to monitor serum glucose levels, and to detect pH and CO_2, oil in water, water in oil, hydrogen gas, components of a gas headspace, non-destructive measurement of Cr(VI), and various species dissolved in a glass matrix.

With reference to FIG. **1**, in conventional PAS apparatus **2** a single cuvette **4** holds a sample **6** for analysis. The sample **6** to be analyzed is irradiated intermittently by an excitation source **8**, light of a selected wavelength. The light is emitted from the excitation source **8** and is optically directed to a light chopper **10**, typically a slotted disk that rotates to effectively "switch" the light from the excitation source on and off. The intermittent light travels through optical filters **12** to deliver intermittent light of a selected wavelength. The light then enters the cuvette **4** containing the sample **6**. As the sample **6** absorbs energy from the light, acoustic waves or signals are generated. Acoustic signals are detected by an acoustic detector **14**. Typically, the conventional acoustic detector used is a microphone connected to the cuvette **4** directly or via an acoustic channel **16**. An amplifier **18** is electrically connected to the acoustic detector **14** to receive and amplify electrical output from the acoustic detector **14**.

The present PAS methods and sample arrays take advantage of the fact that the measurable physical parameter in PAS analysis is the acoustic signals generated by changes in pressure (ΔP) due to absorption of electromagnetic energy. Thus, the unique properties of PAS absorption are amenable to relatively small sample volume analyses. Specifically, the amplitude of the PAS signal, directly proportional to the ΔP, is dependent only on the density of the absorbed energy. In other words, the signal may be represented as:

$$\text{Signal} \sim \Delta P \sim (\beta/\alpha C_p \rho)(E_{abs}/V_o)$$

wherein ΔP is the pressure change in the sample, β, α, C_p, and ρ are the thermoelastic properties of the solution or matrix expansivity, compressibility, heat capacity, and density, respectively, E_{abs} is the quantity of energy in joules absorbed by the sample and V_o is the irradiated volume (the irradiated volume is either less than or equal to the volume of the sample). As the path length is reduced both the absorbed energy and the volume are reduced simultaneously. Thus, the signal remains constant.

Furthermore, ΔP is independent of the path length. Because ΔP is a measure of the change in force per unit area, the signal is independent of the size of the detector (as long as the detector has sufficient electrical capacitance, as detailed below). Accordingly, a reduction in both the sample volume and the acoustic detector area as disclosed provides for rapid, array-based sample analyses without a loss in

analytical selectivity or sensitivity. The disclosed PAS methods for simultaneous or sequential multiple sample array PAS analyses and sample array vessel apparatus also provide as much as a thousand fold increase in detection sensitivity as compared to conventional, single sample cuvettes, without sacrifice as to applicability.

More particularly, the factors affecting amplitudes of PAS signals S(V), include:

1) the energy absorbed per unit excitation volume (i.e. sample volume),

$$E_\lambda(1-10^{-A\lambda})/V_o \quad (1)$$

where E_λ is the energy per light pulse (J), A_λ the absorbance of the sample at the wavelength (λ) of the light pulse (dimensionless), and V_o the irradiated volume (mL);

2) the thermo-elastic properties of the solution ("solvent") containing the analyte,

$$\beta/\alpha C_p \rho \quad (2)$$

where β is the thermal coefficient of expansion of the sample (° C.$^{-1}$), α is the isothermal compressibility of the sample (Pa^{-1}), C_p is the molar heat capacity of the sample (J° C.$^{-1}$g^{-1}), and ρ is the density of the sample (g mL^{-1});

3) the acoustic geometry and transmissivity of the solvent (i.e., the solution containing an analyte of interest) and other materials used to form an acoustic bridge between the sample and a detector, e.g., a transducer,

$$\left\{\sum_{i=1}^{n}(r_{i-1}/r_i)\exp[k_i(r_{i-1}-r_i)][1-(z_i-z_{i+1})^2/(z_i+z_{i+1})^2]\right\} \quad (3)$$

where n is the number of distinct media "i" in the acoustic bridge (including piezoelectric material in a transducer), r_i is the radial distance of the acoustic wave from the center of the excitation volume (m) (r_0 corresponds to the radius of the excitation volume), k_i is the acoustic absorption coefficient for waves of known frequency and velocity in medium i (m^{-1}), and z_i is the acoustic impedance of medium "i" wherein medium i is an acoustically homogeneous medium through which sound passes en route from a source to a transducer (kg m^{-2}s^{-1}); and

4) the efficiency of the transducer that converts the acoustic impulse into an electric impulse,

$$K_{tw}h(d_{tw}/\epsilon_0\epsilon_n)(C_t/C_{circuit}) \quad (4)$$

where K_{tw} is the electromechanical coupling coefficient for the specific orientation of transducer (t) and acoustic wave (w), h is the thickness of the transducer element in the direction of acoustic wave travel (m), d_{tw} is the piezoelectric strain constant for the transducer/wave orientation (C N^{-1}), ϵ_0 is the permittivity of a vacuum (C V^{-1}m^{-1}), ϵ_n is the relative dielectric constant of piezoelectric material in the transducer, and C_t and $C_{circuit}$ are the respective capacitances of the transducer and the total circuit (transducer and cables) feeding into the amplifier (pF). K_{tw} and ϵ_n are dimensionless.

Combination of the four factors outlined above provide the following equation for expression of the signal S, assuming a cylindrical excitation (sample) volume with radial detection of a single acoustic mode in the transducer:

$$S=[E_\lambda(1-10^{-A\lambda})/V_o][\beta/\alpha C_p\pi]\{\Sigma^n{}_{i=1}(r_{i-1}/r_i)\exp[k_i(r_{i-1}-r_i)][1-(z_i-z_{i+1})^2/(z_i+z_{i+1})^2]\}[K_{tw}h(d_{tw}/\epsilon_0\epsilon_n)(C_t/C_{circuit})] \quad (5)$$

PAS Sample Array Vessels

A conventional microtiter plate is shown in FIG. **2**. Such a conventional microtiter plate **2** includes a body **4** having multiple sample wells **6**. Conventional microtiter plates (such as microtiter plate **2**) are commercially available from sources such as MicroLiter Analytical Supplies, Millipore, and Wheaton Science Products.

FIG. **3***a* is a top view of an embodiment of the sample array vessel **20** presently disclosed (FIG. **3***b* is a partial side view of the same embodiment). The sample array vessel **20** comprises a vessel body **24** comprising a plate with an upper surface **32** and a lower surface. Vessel body **24** further includes multiple sample cells **40** formed on or connected to the plate to form an arrangement or array of sample cells **40**, e.g., an n, m matrix as shown in FIG. **3***a*. The vessel body **24** is formed of any sufficiently rigid material in which or to which sample cells **40** may be formed of or connected to, such that the sample cells are adequately supported by the vessel body. For example, the vessel body **24** may be formed of a plastic such as polyethylene or polypropylene.

The sample cells **40** may be any of a variety of shapes. For example, the sample cells may form hollow cylinders (having a bottom plate to hold samples therein) as shown in FIG. **3***a*. Each sample cell **40** comprises a well **44** for holding a sample to be analyzed. The sample cells **40** are formed of any sufficiently rigid material that is suitably transmissive to acoustic waves (e.g., a sufficiently hard material for suitable acoustic transmissibility but suitably soft so as to absorb acoustic signals generated by analytes in a sample within the sample cell **40**). Good results are obtained with sample array vessels **20** having sample cells **40** formed of materials, such as polystyrene, polyethylene, and/or polypropylene.

To improve acoustic transmission in the sample array vessel **20** from sample cell **40** to sample cell **40**, and through acoustic fins **60** (discussed below) to the acoustic detector, space or air gaps **50** (see, e.g., FIGS. **2** and **3**) between the sample cells **40** are preferably filled with an acoustic transmissive material. Any material capable of effectively absorbing and transmitting acoustic waves may be used. For example, good results are obtained when gaps or spaces **50** between the sample cells **40** are filled with epoxy or silicon rubber.

FIG. **14** illustrates the improved acoustic transmissivity and, hence, increased acoustic signal sensitivity for sample array vessels **20** including acoustic gap-filling material in the gaps **50** between sample cells **40**. Specifically, a sample array vessel **20** having no acoustic gap-filling material has relatively low acoustic sensitivity as illustrated by curve **1** in FIG. **14**. A sample array vessel having silicon formed in the gaps between the sample cells **40** shows improved acoustic transmissivity (i.e., curve **2** in FIG. **14**) and, hence, acoustic signal sensitivity for sample cells positioned nearer the acoustic detector. A sample array vessel **20** having an epoxy formed in gaps between the sample cells **40** has improved acoustic transmissivity and, hence, acoustic signal sensitivity for all sample cells in the array vessel. The epoxy may comprise, for example, a quick-setting epoxy (available from, e.g., Radioshack as epoxy #64-231313, i.e., curve **3** in FIG. **14**) and/or a regular setting epoxy (available from, e.g., Dexter Corp, of Olean, N.Y., as epoxy RE2038/HD3404, i.e., curve **4** in FIG. **14**). Those sample cells positioned closest to the acoustic detector (e.g., well **1**) have the highest level of acoustic sensitivity. A sample array vessel **20** having epoxy RE2038/HD3404 filling gaps between sample cells **40** improves acoustic transmission from all of the sample cells in the vessel and shows significantly improved acoustic

transmission from sample cells positioned nearest an acoustic detector. Such a sample array vessel provides significantly increased acoustic signal sensitivity (curve **4** in FIG. **14**).

Arrangement of the sample cells **40** of the sample array vessel **20** may take any of a variety of forms. For example, a sample array vessel may have cells arranged in an n, m matrix, wherein n and m are integers from 1 to as large as can be reasonably handled by operators and PAS apparatus. Sample array vessels having about 24, 96, 384, 864, or 1536 sample cells with a 2:3 row-to-column arrangement have been found to provide good results. It is understood, however, that either n or m of the matrix may be increased to a value greater than the recited values, depending upon sample cell size, detector size, and arrangement.

The embodiment of the sample array vessel **20** shown in FIG. **3***a,* as well as the alternative embodiments discussed below, may include a single or multiple acoustic detectors **48**. The acoustic detectors **48** may comprise any suitable acoustic detector, such as microphones or transducers (e.g., piezoelectric transducers). Suitable ceramic-type transducers are available from a number of commercial sources such as PAC, Material Systems Inc., Panametrics, PCB, Stavely, or KKB. Additionally, piezoelectric crystals available from manufacturers such as Channel Industries, Sensor Technology Ltd., and Valpey Fisher or flexible polymeric transducers, such as polyvinylidenefluoride (PVDF) (commercially available from Ktech Corporation, of Albuquerque, N.Mex.) may be used. Immersion detectors (discussed below) comprising, e.g., thin probes such as VP-A50 probes available from Valpey Fisher may also be used in particular embodiments of the sample array vessels. Although acoustic detectors may be referred to at times herein as "transducers" it is to be understood that any suitable acoustic detector may be utilized.

Embodiments utilizing arrays of acoustic detectors **48** may require use of relatively small transducers. The transducer, however, must have sufficient capacitance, which decreases with the contact area of the transducer. Low capacitance means low ability to drive a signal through circuitry connecting the transducer to an amplifier. To maximize voltage from a transducer, contribution to $C_{circuit}$ (i.e., the associated cables and connectors of the electronic circuitry) is preferably minimized.

Of the embodiments of the sample array vessels that include one or more acoustic detectors, the acoustic detectors may be connected to or arranged relative to the sample cells **40** in a variety of manners. For example, to receive acoustic signals from each of the sample cells **40**, acoustic detectors **48** may be connected to or arranged relative to the sample cells **40** by a variety of acoustic bridges. The detectors may be positioned to receive acoustic signals from the sample cells by direct contact (e.g., contact transducers), air-coupling (e.g., air-coupled transducers) or by immersion (e.g., immersion transducers FIGS. **15***a*–**15***c*).

With reference to FIG. **15***a,* an acoustic bridge between each sample cell **140** and an associated detector **148** may comprise a contact bridge **158**. The contact bridge **158** is formed between a wall **152** of the sample cell **140** and the detector **148**. An acoustic coupling fluid (e.g., grease, water, epoxy) may be placed at the contact bridge **158** between the detector **148** and an outer surface of the wall **152** of the sample cell **140**. A contact-detector arrangement preferably utilizes a transducer **148** in direct physical contact with the wall **152** of the sample cell **140**. Piezoelectric transducers having resonant frequencies of from about 100 KHz to about 10 MHz have been found to be especially useful.

With a direct contact design, a contact detector **148** (FIG. **15***a*), e.g., a contact transducer, preferably contacts or encapsulates at least a portion of the sample cell **140**. For example, the detector may comprise a hollow cylindrical transducer that fits about the outside of the wall of a sample cell **40** of the sample array vessel **20** (see, e.g., FIGS. **9** and **10**). Alternatively, the detectors may comprise flexible polymeric transducers, such as a PVDF transducers that may encompass a portion of the inside or outside wall of a sample cell or otherwise contact the sample cell or an acoustic collector post (as discussed below). Flexible detectors may accommodate slight stress differences arising from variations in sample cell geometry. A hollow-type ceramic transducer filled with a flexible, acoustically transmissive material, such as a plastic liner, may be used to minimize mechanical stress on the transducer as it fits about the outside wall of the sample cell. Although sample cells of the sample array vessel **20** are generally discussed herein as being cylindrical in shape, the sample cell may be of any acoustically suitable shape.

Although many embodiments of the sample array vessels are discussed and illustrated utilizing contact acoustic detectors, such as contact transducers, any suitable acoustic detector may be used with any of the embodiments of the sample array vessel. That is, any suitable acoustic bridge between the sample array vessels and acoustic detectors may be used (including but not limited to air-coupling and immersion coupling). For example, the sample array vessel **20** may include an air-coupling acoustic bridge **162**, wherein the acoustic bridge comprises air between an outer surface of a wall **152** of a sample cell **140** and an associated detector **148** (FIG. **15***b*). Detectors **148** that are air-coupled to the sample cell **140** may avoid problems associated with reproducible contact (i.e., reproducible force on the detector at the time of contact) through ensuring reproducible distance and orientation relative to the sample cell to be analyzed. Preferably, the transducer **148** is air-coupled near the sample cell **140**. An acoustic channel (**104** in FIG. **17**) may be included to air couple the detector to the sample cell.

An illustrative embodiment of an air-coupled detection system is shown in FIG. **17**, wherein a single-cell, air-coupled detection system comprises an optical window **102**, an acoustic detector **48**, and an air-column **104**. The detector **48** may be mounted to a side portion of the air column **104** as shown or may take any of a variety of acoustically suitable positions on the air-coupled detection system. The air-coupled detection system is positioned above a sample cell **40** such that a light source LB may be directed through the optical window **102** and into the sample cell. Any suitable sealing means, such as a non-sticking rubber gasket (not shown) may be positioned between the sample cell **40** of the sample array vessel and the portion of the air column **104** that contacts the sample array vessel surface, to ensure a suitable seal therebetween. Sealing the sample cell **40** to be analyzed aids in the transmission of acoustic waves from the sample cell **40**, through the air column **104** and to the detector **48**.

Such an air-coupled detection system may be moved from sample cell to sample cell of a sample array vessel (or the air-coupled detection system may be stationary and the sample array vessel may be moved to place the sample cells to be tested in contact with the air-coupled detection system). An air-coupled detection system (such as the embodiment shown in FIG. **17**) may avoid the contamination difficulties sometimes encountered with immersion-detection systems and difficulties associated with reproducible contact sometimes encountered with contact-detection systems.

The placement of air-coupled detector embodiments relative to sample cells of a sample array vessel may be the same as or similar to that discussed below relative to contact acoustic detector placements. For example, an air-coupled detector may be fixed at each sample cell **40**, there may be a single or a few air-coupled detectors fixed strategically about the sample array vessel **20** or there may be one or more movable air-coupling detectors positionable to detect acoustic signals from sample cells **40** in the sample array vessel.

The sample array vessel **20** may alternatively have a liquid-coupling acoustic bridge, wherein an acoustic detector **148** is immersed in a liquid in a sample cell adjacent or near a sample cell **140** to be analyzed (FIG. **15***c*). For immersion detection, the acoustic detector preferably comprises a thin probe, such as a VP-A50 probe (available from Valpey Fisher) of a suitable size to fit within sample cell volumes of the sample array vessel **20**. The immersion detector may be movable such that it can be moved and placed in a sample cell immediately adjacent the sample cell to be analyzed to avoid cross contamination between samples. With such an arrangement, at least one sample cell in the sample array vessel would be sacrificed for the initial measurement of a first sample cell of the sample array vessel. Thereafter, the immersion detector would be moved and immersed in the sample cell just previously measured for analysis of the next, immediately adjacent sample cell. When cross contamination is not a concern, or when an immersion detector may be cleaned between samples, the detector may be placed directly into the cell being analyzed.

Similar to the arrangement discussed below relative to contact acoustic detectors, the sample array vessel may include an immersion detector, wherein one sample cell per row of sample cells is sacrificed and the immersion detector is positioned only in the first sample cell of the row and detects acoustic signals from all of the sample cells in the row. Alternatively, a single immersion detector may be positioned in a sample cell centrally located within the sample array vessel or about a group of sample cells within the sample array vessel. Such a sample array vessel provides a mechanically simple device as compared to a sample array vessel including the use of a movable detector.

Another type of immersion detector that may be used with the sample array vessel of the present invention may comprise an immersion transducer formed to fit within the sample cell to fit near or to contact interior walls of the sample well. For example, an array vessel having cylindrically shaped sample cells may include a hollow cylinder detector formed of a material such as PVDF or a ceramic piezoelectric that is insertable into the cylindrically shaped well. Such an arrangement avoids some impedance loss associated with a strictly aqueous acoustic contact. Further, the use of the sample fluid within the sample cell minimizes friction during transducer placement.

One or more acoustic detectors may be placed relative to the sample array vessels in any acoustically suitable position. The acoustic detectors may be attached to the sample array vessel or may be a part of a PAS system. With acoustic detectors affixed to a PAS system, the detectors may be acoustically connected to ("docked in") the sample array vessel when the vessel is positioned within the PAS system. Whether affixed to the sample array vessel or part of a PAS system and acoustically connected to the vessel when placed in the PAS system, the acoustic detectors may be positioned in a variety of locations in or relative to the sample array vessels. The following embodiments illustrate a few of a variety of acoustic detector placements. The sample array vessels are not limited to such embodiments discussed and/or illustrated in the accompanying figures but include acoustic detectors in any of the variety of acoustically suitable detector placements.

For example, as shown in FIGS. **3***a* and **3***b*, the sample array vessel **20** may include one or more acoustic detectors **48**, positioned about the perimeter of the vessel to analyze all of the sample cells **40** in the sample array vessel **20**. As shown in FIG. **3***a*, a first acoustic detector T**1** (or more) may be positioned at the end of rows m and a second acoustic detector T**2** (or more) may be positioned at the end of rows n (when the sample cells are arranged in a matrix). As shown, the acoustic detectors **48** may be connected to one or more rows of sample cells **40** of the sample array vessels **20**. The specific embodiment illustrated in FIG. **3***a* includes at least two detectors T**1** and T**2**, each of which are acoustically connected to all of the sample cells **40** in the sample array vessel **20**. Thus, acoustic signals generated by analytes contained in the sample cells **40** would be detected by at least two detectors (i.e., T**1** and T**2**). The fewer the acoustic detectors per sample array vessel, the fewer calibration steps needed for PAS analysis of samples within the sample array vessel.

The acoustic detectors **48** in the FIGS. **3***a* and **3***b* embodiment are preferably acoustically connected to each of the sample cells **40** by acoustic fins **60**. For the matrix sample cell arrangement shown in FIG. **3***a*, acoustic fins **60** are shown to extend both vertically and horizontally within the sample cell matrix. Acoustic fins **60** preferably connect each sample cell **40** to the next sample cell **40** and eventually lead to the one or more acoustic detectors **48**. The acoustic fins **60** may connect from one sample cell **40** to the next sample cell **40** by a single contact with each cell (e.g., contact with a wall of the sample cell **40**) or may wrap about a portion of the sample cell **40** wall and then lead to the next adjacent sample cell **40**. The acoustic fins **60** may extend the full height of the acoustic cell **40** wall.

The acoustic fins **60** may be formed of any sufficiently rigid material that is suitably transmissive to acoustic waves. The acoustic fin **60** material is preferably sufficiently hard to effectively transmit acoustic waves but suitably soft so as to absorb acoustic waves generated by analytes in a sample within the sample cell **40**. Acoustic fins **60** formed of a variety of different materials, such as polystyrene, polyethylene, polypropylene, plastics with mineral or metallic fillers (e.g., composite plastics), laminated carbon materials, metallic materials, and mixtures thereof. In alternative embodiments of the sample array vessel, the acoustic fins **60** perform the dual function of forming the gap **50** filling material discussed above as well as acting as acoustic wave paths from the sample cells to the acoustic detector(s). Gap filling material may be used in conjunction with sample array vessels having acoustic fins **60** to increase acoustic sensitivity of the device.

When utilizing acoustic detectors **48** comprising, e.g., piezoelectric transducers cylindrical in shape with a sample array vessel as shown in FIG. **3***a*, a substantially flat surface or end of the cylindrically-shaped transducer is (typically) the portion of the transducer that receives the acoustic signals. The transducer is, thus, preferably positioned such that the end or flat surface of the cylinder is substantially perpendicular relative to the direction in which the acoustic waves will travel. A side view of an acoustic detector that is cylindrical in shape (that may be used in the FIG. **3***a* embodiment) is shown in FIG. **3***b* attached to acoustic fins **60**. An acoustic fin coupler **61** may be used to attach the acoustic fins to the acoustic detector **48**. Further, an acoustic coupling fluid may be placed between the acoustic fin coupler **61** and the acoustic detector **48**.

In another embodiment, as shown in FIG. **4**, the sample array vessel **20** may include acoustic fins **60** forming lines along one or two sides a, b of the sample cells **40** in the sample array vessel. The acoustic fins **60** of the FIG. **4** embodiment preferably extend along each row m of sample cells **40** from a first end **52** to a second end (not shown). Although the embodiment of the sample array vessel **20** shown in FIG. **4** includes two acoustic fins **60** extending along either side of each row m of sample cells **40**, a single acoustic fin **60** for each row of sample cells may be used. A single acoustic fin **60** for each row m of sample cells **40** may provide a "narrower" acoustic signal to the transducer, due to possible differences in travel distances when more than one acoustic fin is utilized. Embodiments of the sample array vessel **20** wherein acoustic fins **60** are connected from one sample cell to the next (and then to the acoustic detector) in a substantially straight line (i.e., forming a limited number of (or no) turns) may reduce acoustic wave reflection and loss of acoustic signal sensitivity.

The acoustic fins **60** contact each sample cell at, at least, a portion of the sample cell **40** wall. The acoustic fins **60** are preferably connected to one or more acoustic detectors **48** positioned at the end of a set of sample cell **40** rows. As with all embodiments of the sample array vessel, the acoustic detectors **48** of the sample array vessel **20** embodiment shown in FIG. **4** may be affixed to the sample array vessel **20** or may be part of the PAS system in which the sample array vessel **20** may be placed.

The embodiment shown in FIG. **5** illustrates a directed acoustic fin **60** design wherein an acoustic detector **48** is positioned centrally in the sample array vessel or centrally about a group of sample cells **40** of the sample array vessel **20**. For example, as shown, an acoustic detector **48** may be centrally positioned about a group of 24 sample cells **40**. Thus, a sample array vessel **20** having 96 sample cells may include four acoustic detectors. The acoustic fins **60** of the FIG. **5** embodiment extend from a first end **62** connected to a sample cell **40** wall to a second end **63** connected to the acoustic detector **48**. The acoustic fins **60** are preferably positioned such that they do not touch one another. The acoustic detectors **48** used may comprise, for example, a transducer embedded within the sample array vessel (or insertable into the sample array vessel). A hollow, cylindrically shaped, radially active plane-wave transducer is preferably positioned within the sample array vessel **20** such that the end of the cylinder is substantially parallel to (i.e., the cylinder axis is substantially perpendicular to) the plane defined by the lower surface **32** of the sample array vessel **20**.

In yet another embodiment of the sample array vessel **20**, as shown in FIG. **6**, the vessel may include one or more detectors **48**, comprising, e.g., contact transducers, positioned at a collection bar **64**. The face of the collection bar **64** preferably is positioned substantially perpendicular to the lower surface **32** of the sample array vessel **20**. The collection bar **64** may be formed of the same material as the acoustic fins **60** or a different but acoustically suitable material. Each sample cell **40** is acoustically connected to the collection bar **64** (and hence the acoustic detector **48**) via separate acoustic fins **60** extending from each sample cell and terminating at the collection bar **64**. The acoustic fins **60** preferably do not contact one another. The acoustic detector **48** may be connected to the collection bar **64**, for example, using an acoustic coupling fluid and a tensioning device or support (not shown). The tension device or support maintains the acoustic detector against the collection bar **64** to enhance transmission of acoustic signals from the sample cells via the acoustic fins **60** and collection bar **64** to the detector. If a cylindrical acoustic detector **48** is used, the detector may be, for example, positioned such that an end of the cylindrical detector is substantially parallel to the face of the collection bar and perpendicular to the plane defined by the lower surface **32** of the sample array vessel **20**.

An embodiment of the collection bar **64** of the FIG. **6** sample array vessel **20** is shown in FIG. **7**. Acoustic fins **60** extending from the sample cells **40** (see FIG. **6**) preferably terminate at the collection bar **64** with tapered ends **66**. Further, the collection bar **64** preferably tapers where connected to the acoustic detector **48** to have a cross-sectional area substantially equal to the cross-sectional area of the acoustic detector connected thereto. The tapering focuses the acoustic signals from the collection bar **64** to the acoustic detector **48** and minimizes reflection of the signals.

With reference to FIG. **8**, an acoustic collector lens **70** may be used rather than a collection bar **64** (FIGS. **6** and **7**). The collector lens **70** focuses the acoustic signals received (via acoustic fins **60**) from the sample cells **40** to an acoustic detector **48**. As with the collection bar **64**, the acoustic collector lens **70** is preferably formed of the same material as the acoustic fins **60** of the sample array vessel **20**. The collector lens **70** may be a bulbous shape or other acoustically suitable shape that focuses acoustic waves, limits reflections, and decreases in size from a first end **71** to a second end **72**. The second end **72** of the collector lens **70** preferably has a cross-sectional area substantially equal to the cross-sectional area of the acoustic detector **48** to be connected thereto. The curved surface of the collector lens **70** allows acoustic signals to be received from the acoustic fins **60** attached thereto with minimal reflection and orients the acoustic waves received via the acoustic fins **60** toward the acoustic detector **48**. The acoustic signal focusing of the collector lens **70** embodiment increases acoustic signal sensitivity of a sample array vessel **20**.

Preferably, a sample array vessel **20** including a collector lens **70** also includes acoustic fins that have a first tapered end **64** connected to the collector lens **70** and a second tapered end **68** connected to a sample cell **40**. Preferably, the second tapered end **68** of the acoustic fins **60** wrap about a portion of the sample cell **40** to increase the amount of acoustic signal the acoustic fin **60** absorbs from the sample cell. Preferably, the second tapered end **68** of the acoustic fins **60** encircle about one half of the sample cell exterior to minimize acoustic signal loss through reflection. The second end **68** of the acoustic fins **60** may taper down from its initial contact point with the sample cell **40** to be relatively thin at about half way around the sample cell wall to further minimize back-reflection of the acoustic signal.

FIGS. **9** and **10** are cross-sectional views of embodiments of the sample array vessel **20**. These embodiments of the vessel **20** include acoustic detectors **48** that contact each sample cell **40** from below. The acoustic detectors **48** may be moved from sample cell **40** to sample cell **40** to contact each sample cell. Alternatively, the detectors **48** may be affixed to a PAS system (not shown) and the sample array vessel **20** may be moved to connect each sample cell **40** with the detector sequentially.

The acoustic detector **48** used with the sample array vessel **20** of FIG. **9** may comprise, for example, a PVDF polymeric transducer. A more flexible detector minimizes problems encountered with differing cell geometries and typically has a higher sensitivity to pressure to provide more sensitivity to acoustic signal detection as compared to ceramic type detectors. In addition, the sample cells **40** of the sample array vessel **20** may be tapered as shown in FIG.

9 such that the sample cells gradually increase in diameter from the lower portion of the sample cells to the upper portions of the cells.

The PVDF transducer may comprise, e.g., a ring **80** of PDVF material bounded by a flexible support **84**. The flexible support **84** may comprise, e.g., a slotted flexible support **84** bounding and supporting the acoustic detector **48** as shown in FIG. **9**. The flexible support **84** may, however, comprise any of a variety of mechanical devices as known to persons skilled in the art. The flexible support **84** ensures sufficient contact between the acoustic detector **48** (e.g., ring **80**) and the sample cell **40** as the detector or the sample array vessel **20** are moved for sequential testing of each sample cell **40**. As the detector **48** makes contact with the sample cell **40** the ring **80** slips about the outside wall of the sample cell **40**. Support **84** further ensures sufficient contact between the acoustic detector **48** and the wall of the sample cell **40**. The acoustic detector **48** may alternatively comprise, e.g., a ceramic cylindrical piezoelectric transducer. To protect the ceramic transducer a wear coat, e.g., a plastic liner or the like, may be placed within the detector to protect the ceramic material from forces placed upon it when slipped about different sample cells. Although the FIG. **9** embodiment of the sample array vessel **20** shows only a single acoustic detector **48**, there may be multiple acoustic detectors positioned to receive a like number of sample cells so that simultaneous analysis of the sample cells **40** in the sample array vessel may be performed.

Another possible embodiment of a detector system is shown in FIG. **10**. As shown, the detector **48** may comprise two hemicylindrical ceramic transducers that are "clamped" about the sample cell **40** by a tensioning support **89**. (Alternatively, a pair of PVDF transducers or transducers formed of other suitable materials may be used in this embodiment.) The tensioning support **89** as shown in FIG. **10** comprises a slotted clamping mechanism including a hinge **88**. The tensioning support **89**, when clamped or otherwise enclosed about the detector **48** supports the acoustic detector **48** and maintains contact between the detector and the sample cell. Again, the acoustic detector **48** is dimensioned to fit about and make contact with the outside wall of the sample cell **40**. As with the FIG. **9** embodiment, the acoustic detector **48** and slotted tensioning support **89** may be affixed to a PAS system (not shown) and the sample array vessel **20** moved to analyze one or more sample cells (depending on the number of acoustic detectors present in the system). Alternatively, the acoustic detector **48** and slotted tensioning support **89** may be movable from sample cell **40** to sample cell **40**. It is to be understood that the supports **84** and **89** may comprise any of a variety of suitable support mechanisms as would be known to those persons skilled in the art and are not limited to the designs shown in FIGS. **9** and/or **10**.

As yet another alternative to the sample array vessel **20** embodiments shown in FIGS. **9** and **10**, the acoustic detector **48** may instead be attached to a lower end of the flexible support **84** of FIG. **9** rather than comprising a ring or cylinder that fits about the sample cell **40**. In such an embodiment, the flexible support **84** (or other suitable mechanism) would fit about the sample cell **40** of the sample array vessel and would act to transmit the acoustic signal from the sample cell **40** to the acoustic detector attached to the lower end of the support **84**. Accordingly, the flexible support **84** would preferably be formed of a material similar to or the same as the material used to form the acoustic fins **60** of the sample array vessels discussed above. Such a device would not require the acoustic detector be of a shape and size that fits around or about the sample cell **40**.

With reference to FIG. **13**, in yet another embodiment of the sample array vessel **20**, a post collector **90** is positioned centrally in the sample array vessel or about a group of sample cells **40**. Acoustic fins **60** lead from each sample cell **40** in the group of sample cells to the post collector **90**. Post collector **90** may comprise a docking station for an acoustic detector (not shown). For example, the collector post **90** may comprise a solid post or support that an acoustic detector contacts by, e.g., encapsulating a portion of an upper end of the collector post **90** (similar to the matter in which detectors may surround sample cells in the vessel shown in FIG. **9**). Alternatively, an acoustic detector may simply contact an end portion of the post collector **90**. In another embodiment, the post collector **90** comprises a docking station such as a hollow cylinder for receiving an acoustic detector therein. The sample array vessel **20** shown in FIG. **13** shows only a single post collector **90** but may comprise multiple post collectors **90** positioned strategically about the array of sample cells **40**. The sample array vessel **20** of FIG. **13** can provide for sequential or simultaneous PAS analysis of groups of sample cells or of all of the sample cells in the vessel; depending upon the number of detectors included, simultaneous sampling may require that each sample cell have a different acoustic travel distance from the sample cell to the corresponding detector.

Another embodiment of the sample array vessel **20** is illustrated in FIG. **11**. The sample array vessel **20** includes a reflection collector bar **96**. The reflection collector bar **96** preferably forms a tapered post **80** extending substantially perpendicular to the lower surface **32** of the vessel body **24**, downward past the sample cells **40**. The reflection collector bar **96** may be formed as part of the body **24** (i.e., be integral with the vessel body) or may be connected to the body. The reflection collector bar **96** may include a divot **98** to reflect and direct acoustic waves from the sample cells **40** down the tapered post **80** of the reflection collector bar **96**. The divot **98** is preferably formed into the reflection collector bar **96** at an angle of about 45° C. relative to the upper surface **36** of the sample array vessel **20**.

An acoustic detector **48** (e.g., a piezoelectric transducer) may then be placed in contact with the reflection collector bar **96** and held in place by a support device, such as a spring **100**. Although the reflection collector bar **96** shown in the FIG. **11** embodiment is illustrated as being positioned amongst the sample cells **40**, the reflection collector bar **96** is not limited to placement in such a location on the sample array vessel **20**. The reflection collector bar **96** may be placed on or formed by the body of the vessel in any of a variety of acoustically suitable locations; for example, the reflection collector bar **96** may be positioned at the end of a row of sample cells, on a comer of the sample array vessel **20** or there may be multiple reflection collector bars **96** placed in various locations on a single sample array vessel.

Another embodiment of the sample array vessel **20** is illustrated in FIG. **12**. This embodiment of the sample array vessel **20** is similar to that shown in FIG. **11** with the exception that acoustic fins **60** are included to run along the side of the sample cell **40** walls (similar, for example, to the acoustic fins **60** as shown in FIGS. **5**, **6**, **8**, and **13**) and to the reflection collector bar **96**.

Another embodiment of the sample array vessel includes a vessel having a sealing means, such as a cover plate to seal the sample cells of the vessel. For example, as shown in FIG. **16**, a sealing plate **30** comprises a material transmissive to the desired incident light beam B. The sealing plate **30** preferably includes any suitable means **31** to ensure a substantially airtight seal between the sample array vessel

body **28** and the plate **30** and between the plate **30** and an air-coupled acoustic detector **48** (or an acoustic-air channel as shown in FIG. **17**). For example, rubber gaskets or seals formed of materials such as TEFLON, KALREZ, copper, VITON, and epoxy may be used. With such a sample array vessel, as the sample is exposed to the light source, the total gas volume in the sample cell expands against the detector providing increased sensitivity. If the sealed sample array vessel were to be farther filled or compressed with a gas, e.g., helium, the acoustic sensitivity provided by the sample array vessel may be further increased.

In another embodiment of the sample array vessel **20** (as shown in FIG. **18**), the sample array vessel may simply include one to more acoustic detectors **48** positioned by or attached to one or more edges of the vessel body **28**. Alternatively, as shown in FIG. **20**, an acoustic detector D may be positioned beneath the sample cell C of the sample array vessel. There may be an acoustic detector D positioned beneath each sample cell to be tested or either of the sample array vessel or the detector may be moved from one sample cell to the next. Further, the detectors may be affixed to the sample array vessel itself or may be affixed to the PAS system (not shown) upon which the sample array vessel is aligned such that one or more detectors are positioned beneath the sample cells C. In addition, the detectors D may include integrated circuitry IC to transmit the signal received by the detector to a PC (not shown).

As shown in FIG. **19**, the sample array vessel **20** may farther include a reflective layer or plate **38** positioned beneath the sample cells **40**. The reflective layer or plate **38** may be connected to or connectable to the body **28** of the array or may simply be formed on or connected to the lower surfaces of the sample cells **40**. The reflective plate **38** may comprise any material capable of reflecting the light source or irradiation directed from a radiation source in a PAS system into samples retained within the sample cells **40** without significantly impeding the transfer of an acoustic signal from the sample cells **40** to one or more acoustic detectors **48**. For example, the reflective coating or plate **38** may comprise a metal, such as aluminum, gold, or may comprise a mirror. As shown in the embodiment illustrated in FIG. **20**, a detector **48** may be positioned beneath each sample cell **40**. Further, integrated circuitry **50** may be attached to or connectable to each detector **48**. A base plate **42** may be included to support the integrated circuitry **50**, and optionally the detectors **48** and the reflective plate **38**. The sample array vessel **20** shown in FIG. **19** may be one complete unit or may form two or more separable units. For example, the sample array vessel **20** may comprise unit A including the vessel body **28**, sample cells **40** and reflective plate **38** and unit B may comprise a base plate **42** including integrated circuitry **50** and detectors **48** (and, optionally, may also include reflective plate **38**). Unit B may be an integral part of the sample array vessel, may comprise a separable component of the array vessel or may be affixed to a PAS system whereupon the sample array vessel is aligned.

Embodiments of the sample array vessels **20** including acoustic detectors may further include one or more electrical interconnects (not shown) extending from the detectors **48** to electrically couple the detector with circuitry (not shown) for processing and/or displaying signals generated by the detector. Each detector may be electrically coupled to one or more amplifiers for amplifying signals generated by the acoustic detector.

PAS Analyses Methods

With conventional PAS sample analysis, the light source is typically modulated and monochromatized prior to reaching the sample. Modulation may be provided by mechanically chopping the light beam from a continuous source or using a pulsed source. For broad-band sources, monochromatization is achieved by use of notch filters or reflectors. For bright sources of highly absorbing samples, grating monochromators may be used. The amplitude modulation needed for Fourier-transform PAS is obtained either by scanning continuously at an optimal mirror speed or in a step-scanning mode by dithering a mirror in an interferometer during data collection.

Conventional light sources for PAS are either limited in terms of wavelength selectivity (e.g., lasers) or pulse energy (e.g., flash lamps). The pulse energy needed for adequate sensitivity for the present invention PAS methods depends upon the absorptivity of the sample to be analyzed and the efficiency of the PAS apparatus. The presently disclosed PAS methods may include use of a flash-lamp source suitable to provide a sufficient amount of energy for discrete wavelength applications. For example, the flash-lamp source may comprise a SQ xenon flash lamp available from Hamamatsu. Wavelength selectivity with minimal loss in pulse energy may be achieved with a flash-lamp source using narrow-band filters or reflectors for a limited number of wavelengths (as described in Autrey et al., Tunable UV Visible Photoacoustic Detection, *Anal. Chem. Acta,* (2001), which is incorporated herein by reference).

For the disclosed PAS methods, when using variable pulse photoacoustic excitation sources, preferably sufficient energy densities are deposited in the sample to yield transient pressure changes of about $\geqq 1$ mPa. Further, preferably, there is a ratio of transducer frequency (s^{-1}) to source pulse width(s) of about $\geqq 5$. Preferably, the light source (or excitation source) has a pulse width of <5 μs and more preferably, 2 μs with pulse energy of greater than about 3 to about 30 μJ. Pulse-laser sources may also be used to practice the methods. The wave length of the light is preferably chosen based upon where the species of interest has the greatest absorbance and the sample cell material has the least absorbance, as known to those persons skilled in the art.

A notch filter may be used to provide narrow-band light. Additionally, fiber optics and reflective mirrors may be utilized to direct a light beam from the light source to a sample cell. Because the intensity of the light source decreases with increasing distance from the source, however, optical mirrors mounted on the sample array may require a standardization method (as known to those persons skilled in the art) to normalize for changes in light intensity for each sample cells in the sample array vessel. Preferably, optics to collimate the light focus on a fiber bundle, and to deliver the light beam to each sample cell in the sample array aid in the delivery of a constant path length for travel of the light beam. The light exiting such a fiber bundle is preferably shaped to provide an optimized energy density for each sample cell in the sample array vessel.

When using commercially available piezoelectric transducers for acoustic detectors, transient pressure changes in the order of 1 Pa can be detected with no electronic amplification of transducer signals. The use of low noise, high gain (e.g., 100–1000 gain) amplifiers available from Panametrics with the present methods permit the measure of mPa pressure changes with adequate signal averaging to reduce white noise. Analysis of equation (1) discussed above, showed that the photo-induced pressure change in the excitation volume (the sample volume to be analyzed) is equal to the product of the first two terms representing the density of the absorbed energy and the thermo-elastic prop-

erties of the solvent (i.e., term (1) absorbed incident light intensity per irradiated volume, term (2) expansivity, compressibility, heat capacity, and density of the solution in the sample cell). For an analyte dissolved in water, each μJ per μL of absorbed energy should result in a pressure change of about ca. 135 mPa, and thus is detectable by a piezoelectric transducer available from Airmar or Stavely. The minimum pulse energy to reach the pulse threshold of a conventional piezoelectric transducer (i.e., about 1 mPa) can be estimated when the solution absorbance and the excitation volume are known.

A light beam (or other excitation beam) is directed to the sample cell of the sample array vessel. The light beam travels into the sample in the sample cell. An acoustic wave created by absorption of energy by the sample in the sample cell is then emitted from the sample and may be detected by an acoustic detector. For example, a light path as shown in FIG. **16** may be used. A light beam B is emitted from a light source (not shown) of a PAS system into a sample cell **40** retaining a sample. The light beam B travels into and through the sample S. If the sample array vessel includes or is being used in conjunction with a reflective plate (see, e.g., FIG. **19**), the light beam B is reflected back through the sample by the reflective plate. An acoustic wave created by absorption of energy by the sample is then emitted from the sample and is detected by an acoustic detector **48** positioned, e.g., as an air-coupled detector, positioned directly beneath the sample cell or positioned in any other of the variety of acoustically suitable locations.

Another example is illustrated in FIG. **20**, using a transmissive array. A light beam B is directed from a light source (not shown) at an angle θ into and refracts through sample S (retained in a sample cell C) and through a support past an acoustic detector D. Angle θ may be less than the critical angle θ_c (known by those persons skilled in the art) to less than about 90° and is preferably about an angle of about 45°. An acoustic wave emitted from the irradiated sample S travels to the detector D. With such an embodiment, the light beam B is directed to avoid the detector D.

With reference to FIG. **21**, in yet another example, a light beam B may be directed from a light source (not shown) in a direction substantially perpendicular to an upper surface of the sample array vessel **20** (or an optical reflector **7** may be used to direct the light beam B from a PAS system in such a direction). The light beam B is transmitted through a sample in a sample cell **40**. An acoustic wave AW created by absorption of energy by the sample in the sample cell **40** is then transmitted to the air above the sample cell and is preferably reflected by an acoustic reflector **64** to an acoustic detector **48**. In this embodiment, the acoustic reflector **64** transmits the excitation light beam B and reflects the acoustic waves AW.

With reference to FIG. **22**, in yet another example, a light beam B is directed from a light source (not shown) in a direction substantially parallel to an upper surface of the sample array, at an angle greater than the critical angle, θ_c. The light beam B is reflected substantially (i.e., to produce total internal reflection "TIR") back through a sample S (within a sample cell). The acoustic waves created by absorption of energy by the sample S is then transmitted through wall of the sample cell to an acoustic detector D. Clearly, a PAS system used with a sample array may direct the light beam to a sample in a variety of manners (in addition to those outlined herein). With the arrangements set forth in FIGS. **21** and **22**, the light beams avoid impinging upon the detectors.

To analyze acoustic waveform data obtained from the transducers a statistical concept of a histogram is preferably used as described in U.S. Pat. No. 6,253,162, incorporated herein by reference.

The acoustic detectors used with the sample array vessels are preferably calibrated prior to use for detection of acoustic signals generated by analytes present within samples in the sample array vessel. A calibration method may comprise, for example, use of a standard solution or use of the acoustic detector itself in a pulse-echo mode. Specifically, a voltage is applied to the detector. The detector then expands, creating pressure within the detector and thus generates an acoustic wave that travels into the sample array vessel. The acoustic wave absorbed by and transmitted by the sample array vessel is then detected by the acoustic detector.

Alternatively, the acoustic detectors may be calibrated using a detector contact method. First, contact is made between the acoustic detector and the sample array vessel. Second, a standardized acoustic signal is generated. Third, the detector contact is adjusted until the desired electrical signal is obtained. Alternatively, the electrical signal may be detected and recorded for later analysis and normalization (as known to those persons skilled in the art). A standard acoustic signal may be generated, e.g., by directing a pulsed light onto and exposing a black or colored spot (e.g., carbon black) formed on the upper or lower surface of the sample array vessel (depending upon the sample array vessel and the position of the acoustic detector being used therewith).

A tapper calibration method may instead be used to calibrate the acoustic detectors. With the tapper method, the sample array vessel is tapped by a reproducible force to generate an acoustic wave or signal. The detector is then used to detect the signal. The sample array vessel or detector may be adjusted when calibrating using these methods (if the data is not just normalized later) by, e.g., adjusting the tension holding the detector in contact with the sample array or by other suitable means as known to those persons skilled in the art.

Whereas the invention has been described with reference to multiple embodiments of the apparatus and representative methods, it will be understood that the invention is not limited to those embodiments and representative methods. On the contrary, the invention is intended to encompass all modifications, alternatives, and equivalents as may be included within the spirit and scope of the invention as defined by the appended claims.

What is claimed is:

1. A photoacoustic spectroscopy sample array vessel comprising:

a vessel body having at least two sample cells connected to the vessel body, the sample cells having spaces therebetween;

at least one acoustic detector capable of receiving an acoustic signal from at least one sample cell; and

a material formed within the spaces, the material capable of enhancing transmission of the acoustic signal from the at least one sample cell to the at least one detector, the material comprising epoxy or a silicone-based material.

2. The sample array vessel of claim **1**, wherein the at least one acoustic detector is affixed to the body.

3. A photoacoustic spectroscopy sample array vessel comprising:

a vessel body having at least two sample cells connected to the vessel body, the sample cells having spaces therebetween;

at least one acoustic detector capable of receiving an acoustic signal from at least one sample cell;

a material formed within the spaces, the material capable of enhancing transmission of the acoustic signal from

the at least one sample cell to the at least one detector, the material comprising epoxy or a silicone-based material; and

at least one acoustic fin connected to at least one sample cell and the at least one acoustic detector such that an acoustic signal from the at least one sample cell can travel through the at least one acoustic fin to the at least one acoustic detector.

4. The sample array vessel of claim **3**, wherein the at least one acoustic fin functions as the material formed within the spaces.

5. The sample array vessel of claim **3**, wherein the acoustic fin is formed of a material selected from the group consisting essentially of polystyrene, polyethylene, polypropylene, plastics with mineral fillers, plastics with metallic fillers, laminated carbon materials, metallic materials, and mixtures thereof.

6. A sample vessel for PAS analysis comprising:

a body having multiple sample cells for holding samples for PAS analysis;

at least one acoustic detector positioned to detect acoustic signals that emanate from a sample in a sample cell; and

at least one acoustic fin acoustically connecting at least one sample cell to the at least one acoustic detector such that the acoustic signals are directed to the at least one acoustic detector through the at least one acoustic fin.

7. The sample array vessel of claim **6** further comprising at least one acoustic fin connected to each of the multiple sample cells and to the at least one acoustic detector.

8. The sample array vessel of claim **7** further including a separate acoustic fin connected to a respective sample cell.

9. The sample array vessel of claim **8**, further including a collection bar to which the at least one acoustic fin is connected and to which the at least one acoustic detector is connectable.

10. A PAS sample array vessel comprising:

a body having sample cells for retaining samples, the sample cells having side walls and being arranged in an n, m matrix with rows of sample cells;

at least one acoustic detector positioned to receive acoustic signals from a sample in at least one sample cell; and

an acoustic fin extending along a row of sample cells such that the acoustic fin makes physical contact with the side walls of the sample cells in the row, the acoustic fin connectable to the at least one acoustic detector.

11. The sample array vessel of claim **10**, further including separate acoustic fins extending along each row of sample cells such that the acoustic fins make physical contact with the side walls of the sample cells in respective rows, the acoustic fins connectable to the at least one acoustic detector.

12. The sample array vessel of claim **10**, further including a collection bar to which the acoustic fin is connected, wherein the collection bar is connectable to the at least one acoustic detector such that acoustic signals may be directed from the acoustic fins to the collection bar.

13. The sample array vessel of claim **10**, further including an acoustic collector lens to which the acoustic fin is connected, wherein the acoustic collector lens is connectable to the at least one acoustic detector such that acoustic signals may be directed from the acoustic fins to the acoustic collector lens.

14. A PAS sample array vessel comprising:

a body having sample cells for retaining samples;

at least one acoustic detector positioned to receive acoustic signals from a sample in at least one sample cell; and

means for directing acoustic signals from each of the sample cells to the at least one acoustic detector and for minimizing reflection of the acoustic signals.

15. A PAS sample array vessel comprising:

a body having multiple sample cells for retaining samples to be analyzed by PAS;

at least one acoustic detector centrally positioned on the body within a group of sample cells, to receive acoustic signals from a sample in at least one sample cell in the group; and

an acoustic fin having a first end connected to a sample cell and a second end connected to the at least one acoustic detector such that acoustic signals from the sample in the sample cell are directed to the acoustic detector through the acoustic fin.

16. The sample array vessel of claim **15**, further including multiple acoustic detectors each centrally positioned on the body within a group of sample cells, to receive acoustic signals from samples in each sample cell in a respective group of sample cells.

17. The sample array vessel of claim **16**, further including separate acoustic fins extending from each sample cell in a group to a respective acoustic detector centrally positioned on the body within the respective group.

18. The sample array vessel of claim **15**, wherein the sample cells have spaces therebetween, the spaces having acoustic material formed therein, the acoustic material enhancing the acoustic transmissivity of the sample array vessel.

19. A PAS sample array vessel comprising:

a body having multiple sample cells for retaining samples;

at least one acoustic fin having a first end connected to a sample cell and a second end connected to a collector bar; and

at least one acoustic detector connectable to the collector bar to receive acoustic waves therefrom, the acoustic waves generated by a sample in at least one sample cell, the acoustic waves traveling through the at least one acoustic fin to the collector bar.

20. The sample array vessel of claim **19**, wherein the collector bar includes a tapered end connectable to the at least one acoustic detector, the tapered end to focus acoustic waves received by the collector bar to the at least one acoustic detector.

21. The sample array vessel of claim **19**, wherein the second end of the at least one acoustic fin includes a tapered end connected to the collector bar.

22. The sample array vessel of claim **19**, wherein the first end of the at least one acoustic fin includes a tapered end connected to the ample cell.

23. A PAS sample array vessel comprising:

a body having multiple sample cells for retaining samples;

at least one acoustic fin having a first end connected to a sample cell and a second end connected to an acoustic collector lens; and

at least one acoustic detector connected to the acoustic collector lens to receive acoustic waves therefrom, the acoustic waves generated by a sample in at least one sample cell, the acoustic waves traveling through the at least one acoustic fin to the acoustic collector lens.

24. A photoacoustic spectroscopy sample array vessel comprising:

a vessel body having multiple sample cells connected to the vessel body;

a reflection collector bar formed by the vessel body, the reflection collector bar positioned to receive acoustic waves generated by at least one sample in at least one of the multiple sample cells; and

at least one acoustic detector connectable to the reflection collector bar, the acoustic detector capable of receiving the acoustic waves from the reflection collector bar.

25. The sample array vessel of claim **24**, further comprising an acoustic material formed in spaces between sample cells, the acoustic material enhancing the acoustic transmissivity of the sample array vessel.

26. The sample array vessel of claim **24**, wherein the reflection collector bar includes a divot formed therein to reduce reflection of acoustic waves in the reflection collector bar and to direct the acoustic waves to the at least one acoustic detector.

27. A PAS sample array vessel comprising:

a body having multiple sample cells for retaining samples to be analyzed by PAS; and

at least one post collector centrally positioned on the body within a group of sample cells to receive acoustic waves from a sample in at least one sample cell, the at least one post collector capable of receiving an acoustic detector.

28. The sample array vessel of claim **27**, further comprising at least one acoustic fin having a first end connected to a sample cell and a second end connected to the post collector such that acoustic signals from the sample in the sample cell are directed to the post collector through the acoustic fin.

29. The sample array vessel of claim **27**, wherein the sample cells have spaces therebetween and further comprising an acoustic material formed in spaces between sample cells, the acoustic material enhancing the acoustic transmissivity of the sample array vessel.

30. The sample array vessel of claim **27**, wherein the post collector further includes an acoustic detector attached thereto.

31. The sample array vessel of claim **27**, wherein the detector is attached using a flexible support to maintain physical contact between the at least one acoustic detector and the multiple sample cells.

32. A sample array vessel for PAS analysis comprising:

a body having multiple sample cells for holding samples for PAS analysis; and

a reflective plate positioned beneath the sample cells, wherein the reflective plate is transmissive to acoustic waves and reflects light such that the reflective plate is capable of reflecting a light beam directed into a sample away from an acoustic detector without significantly impeding transfer of an acoustic signal emanating from the sample to the acoustic detector.

33. The sample array vessel of claim **32**, wherein the reflective plate includes an upper surface and a lower surface, and an acoustic detector is positioned beneath the lower surface of the reflective plate.

34. A sample array vessel for PAS analysis comprising:

a body having multiple sample cells for holding samples for PAS analysis;

a transducer positioned at each sample cell to detect acoustic signals that emanate from a sample in a sample cell when exposed to an excitation source; and

a reflective plate positioned near the body to reflect a light beam directed into a sample away from a transducer, without significantly impeding transfer of an acoustic signal emanating from the sample to the transducer.

35. The sample array vessel of claim **34**, wherein the reflective plate is positioned beneath the multiple sample cells and above the transducers positioned at each sample cell.

36. A PAS sample array vessel comprising:

a body having an array of sample wells for retaining samples therein;

a reflective plate connectable to a lower portion of the sample wells, wherein the reflective plate is transmissive to acoustic waves and reflects light;

a base plate having an array of acoustic detectors connected thereto, wherein the base plate is positionable below the array of sample wells such that the array of acoustic detectors align with a respective sample well in the array of sample wells.

37. The sample array vessel of claim **36**, wherein the reflective plate is connected to the base plate.

* * * * *

UNITED STATES PATENT AND TRADEMARK OFFICE

CERTIFICATE OF CORRECTION

PATENT NO. : 6,999,174 B2
APPLICATION NO. : 10/002602
DATED : February 14, 2006
INVENTOR(S) : James E. Amonette et al.

It is certified that error appears in the above-identified patent and that said Letters Patent is hereby corrected as shown below:

In the Specification:

Column 2, line 39, "U.S. Application No. 10/061,235," should read --U.S. Application No. 10/001,235,--.

Column 5, line 32, " $\sum_{i=1}^{n}$ " should read -- $\sum^{n}{}_{i=1}$ --.

Column 5, line 48, " $K_{tw}h(d_{tw} / \in_0 \in_n)(C_t / C_{circuit})$ " should read -- $K_{tw}h(d_{tw} / \varepsilon_0 \varepsilon_n)(C_t / C_{circuit})$ --.

Column 5, line 55, "$\in_0$" should read -- ε_0 --.

Column 5, line 55, "$\in_n$" should read -- ε_n --.

Column 5, line 59, "$\in_n$" should read -- ε_n --.

Column 5, line 65, " $\alpha C_p \rho$ " should read -- $\alpha C_p \pi$ --.

Column 5, line 67, "$\in_0$" should read -- ε_0 --.

Column 5, line 67, "$\in_n$" should read -- ε_n --.

Column 14, line 38, "45° C. relative" should read --45° relative--.

UNITED STATES PATENT AND TRADEMARK OFFICE

CERTIFICATE OF CORRECTION

PATENT NO. : 6,999,174 B2
APPLICATION NO. : 10/002602
DATED : February 14, 2006
INVENTOR(S) : James E. Amonette et al.

It is certified that error appears in the above-identified patent and that said Letters Patent is hereby corrected as shown below:

Column 14, line 51, "on a comer" should read --on a corner--.

Signed and Sealed this

Thirteenth Day of November, 2007

JON W. DUDAS
Director of the United States Patent and Trademark Office