US006729185B2

(12) **United States Patent**
Autrey et al.

(10) **Patent No.: US 6,729,185 B2**
(45) **Date of Patent: May 4, 2004**

(54) **PHOTOACOUSTIC SAMPLE VESSEL AND METHOD OF ELEVATED PRESSURE OPERATION**

(75) Inventors: **Tom Autrey**, West Richland, WA (US); **Clement R. Yonker**, Kennewick, WA (US)

(73) Assignee: **Battelle Memorial Institute**, Richland, WA (US)

(*) Notice: Subject to any disclaimer, the term of this patent is extended or adjusted under 35 U.S.C. 154(b) by 33 days.

(21) Appl. No.: **09/766,251**

(22) Filed: **Jan. 19, 2001**

(65) **Prior Publication Data**

US 2002/0026833 A1 Mar. 7, 2002

Related U.S. Application Data

(63) Continuation-in-part of application No. 09/277,687, filed on Mar. 26, 1999, now abandoned.

(51) **Int. Cl.**[7] **G01N 29/22**

(52) **U.S. Cl.** **73/643**; 73/64.53; 356/432; 250/339.1

(58) **Field of Search** 73/587, 64.53, 73/643, 64.56, 570, 24.02, 24.06; 356/432, 440, 436, 369; 250/241.1, 343, 339.1

(56) **References Cited**

U.S. PATENT DOCUMENTS

4,184,768	A	*	1/1980	Murphy et al.	356/326
4,276,780	A	*	7/1981	Patel et al.	356/432
4,436,428	A		3/1984	Watanabe et al.	356/432
4,818,882	A	*	4/1989	Nexo et al.	356/432
5,444,541	A	*	8/1995	Small et al.	356/432
5,596,146	A	*	1/1997	Waller et al.	356/432
5,913,234	A		6/1999	Julliard et al.	73/24.02
6,236,455	B1	*	5/2001	Autrey et al.	356/432
6,244,101	B1	*	6/2001	Autrey et al.	356/432

FOREIGN PATENT DOCUMENTS

JP 62 228140 A 10/1987

OTHER PUBLICATIONS

Patent Abstracts of Japan vol. 012, No. 095(p–681)., Mar. 29, 1988, Toshiba Corp.

T Autrey et al., *"Nanojoules, Nanoliters, and Nanosecond Calorimetry"*, p. 13–19. 1999.

EF Walsch et al., *"Energetics of the Reactions of* $(\eta^6\text{–}C_6H_6)Cr(CO)_3$ *with n–Heptane,* N_2*, and* H_2*, Studied by High Pressure Photoacoustic Calorimetry"*, p. 19425–19429. 1996.

EF Walsch et al., *"Photoacoustic Calorimetry at High Pressure: A New Approach to Determination of Bond Strengths"*, 12016–12020. 1995.

* cited by examiner

Primary Examiner—Hezron Williams
Assistant Examiner—Nashmiya Fayyaz
(74) *Attorney, Agent, or Firm*—Stephen R. May; Douglas E. McKinley, Jr.

(57) **ABSTRACT**

An improved photoacoustic vessel and method of photoacoustic analysis. The photoacoustic sample vessel comprises an acoustic detector, an acoustic couplant, and an acoustic coupler having a chamber for holding the acoustic couplant and a sample. The acoustic couplant is selected from the group consisting of liquid, solid, and combinations thereof. Passing electromagnetic energy through the sample generates an acoustic signal within the sample, whereby the acoustic signal propagates through the sample to and through the acoustic couplant to the acoustic detector.

12 Claims, 7 Drawing Sheets

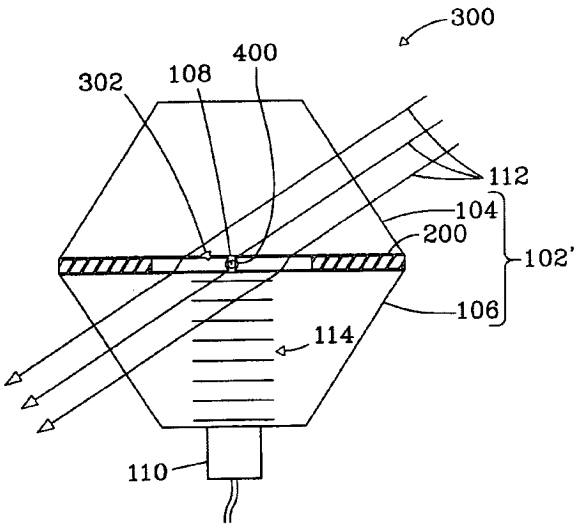

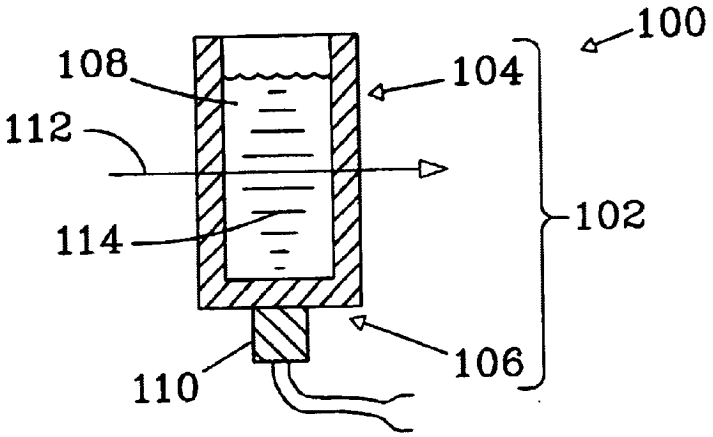

Fig. 1
(Prior Art)

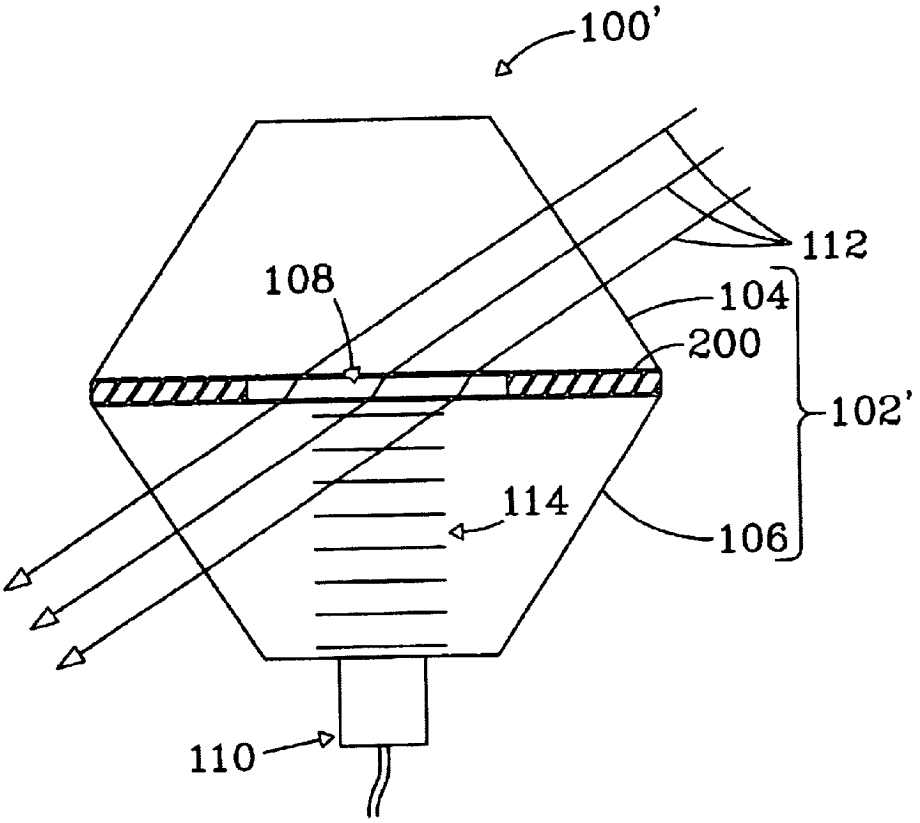

Fig. 2

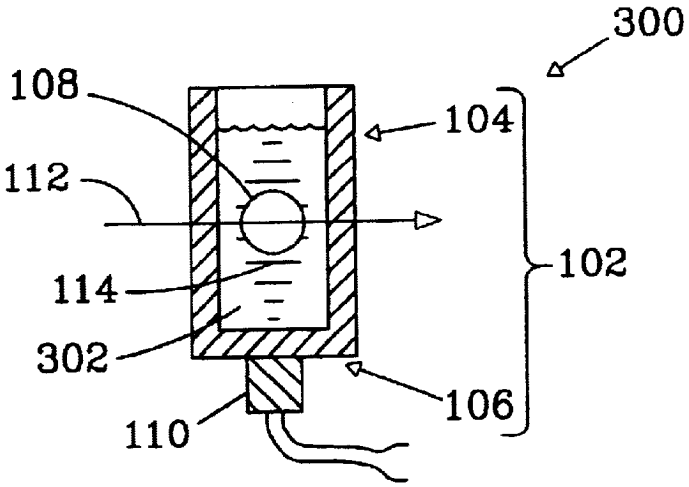

Fig. 3a

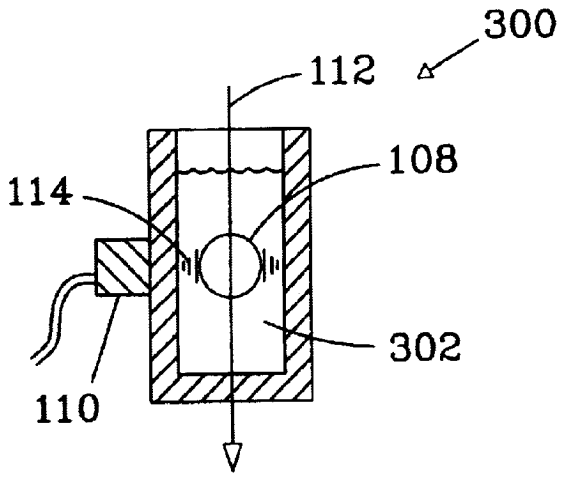

Fig. 3b

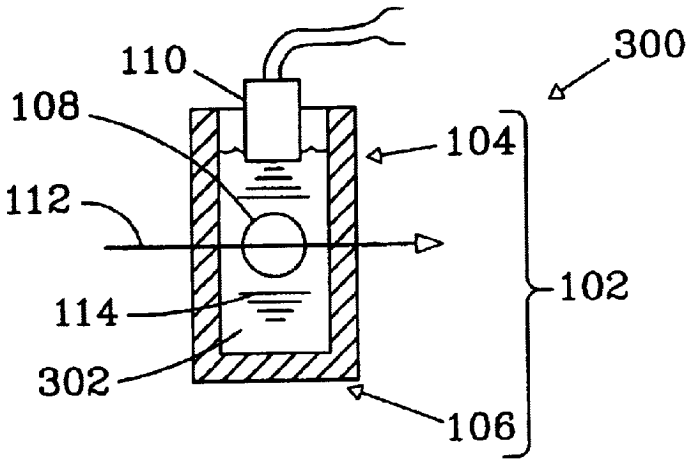

Fig. 3c

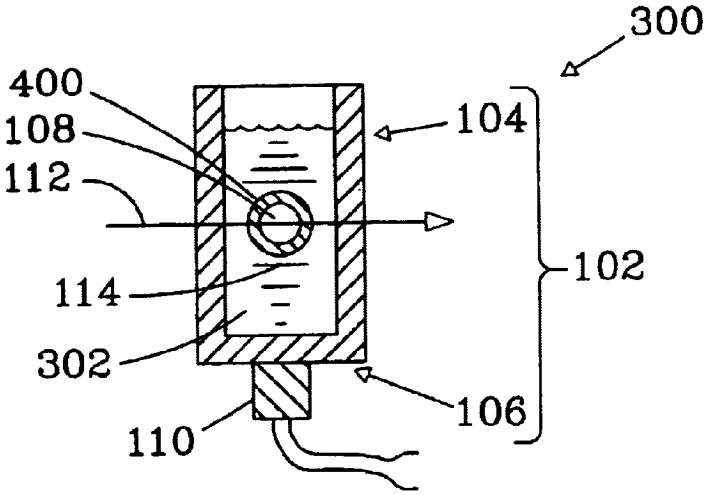
300
400
108
112
104
102
114
302
106
110

Fig. 4

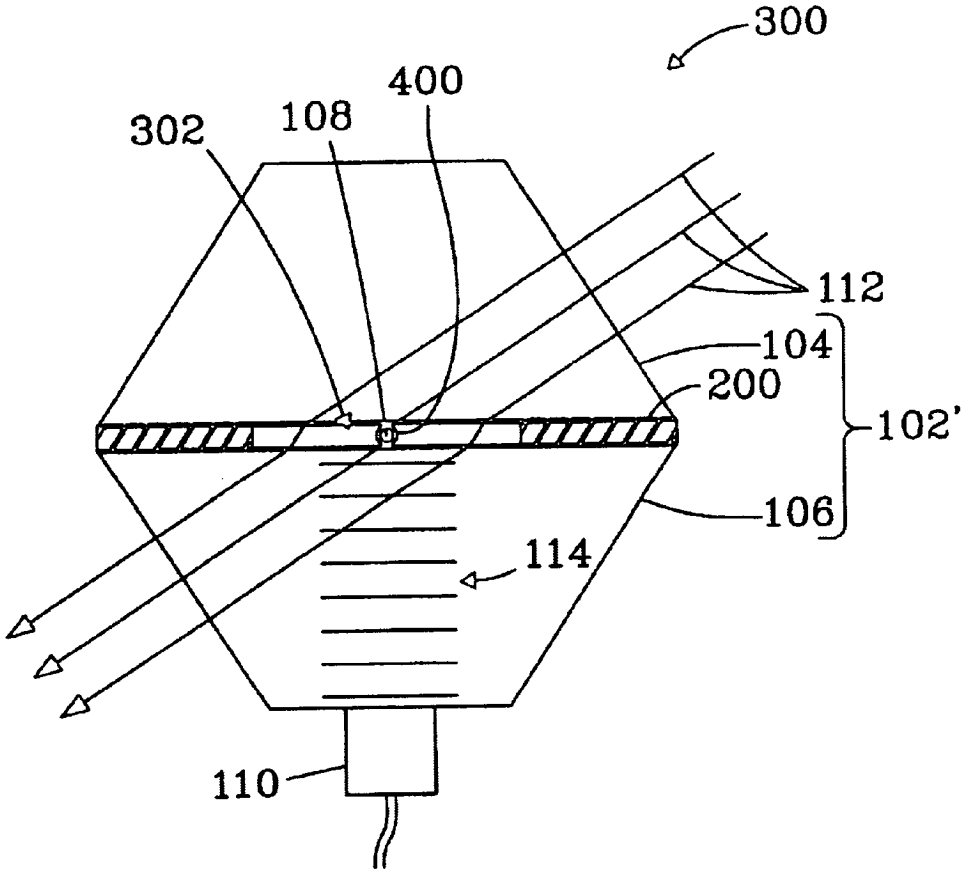
300
400
302
108
112
104
200
102'
106
114
110

Fig. 5

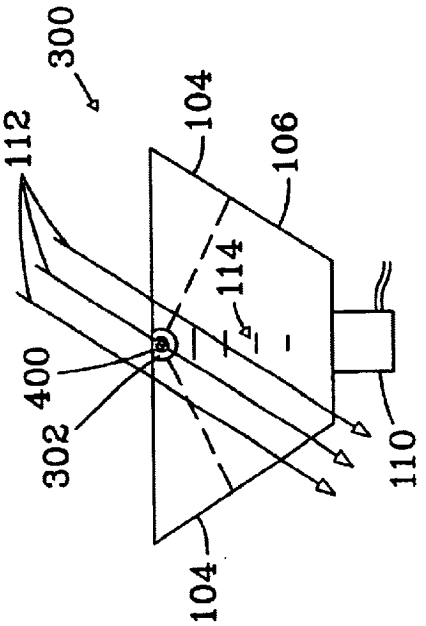

Fig. 6b

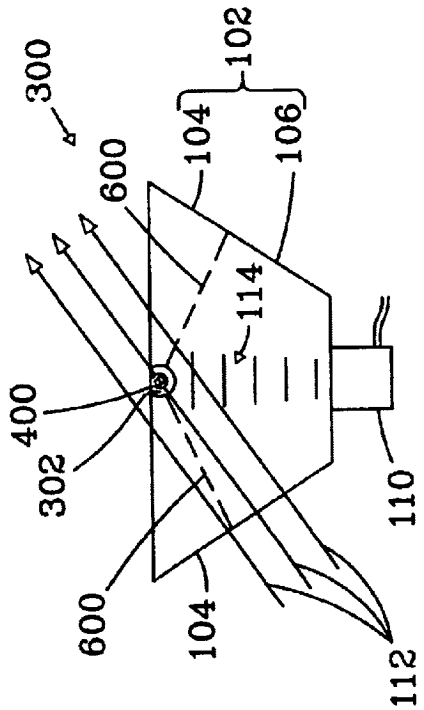

Fig. 6a

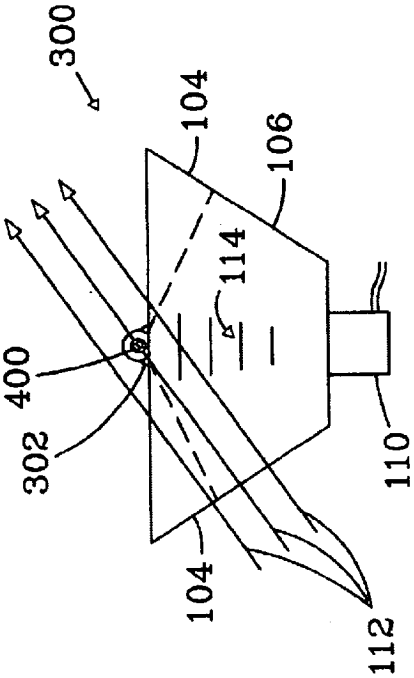

Fig. 6c

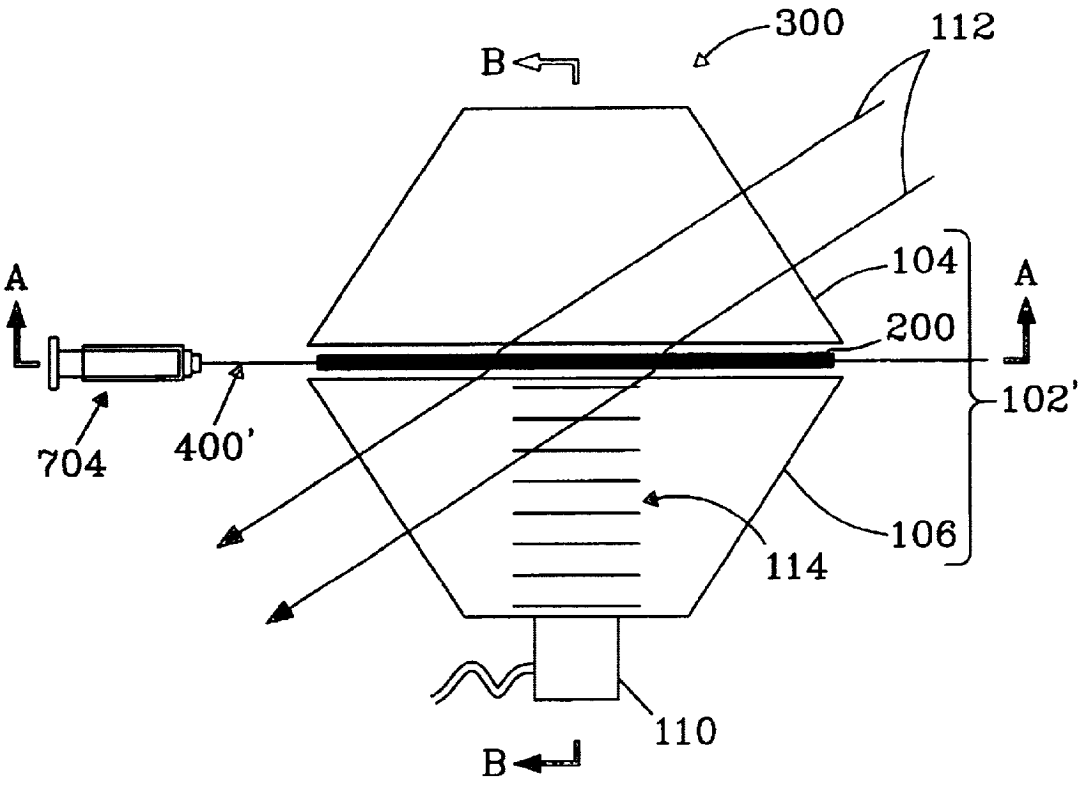
300
112
B
104
A
A
200
102'
704
400'
106
114
110
B

Fig. 7a

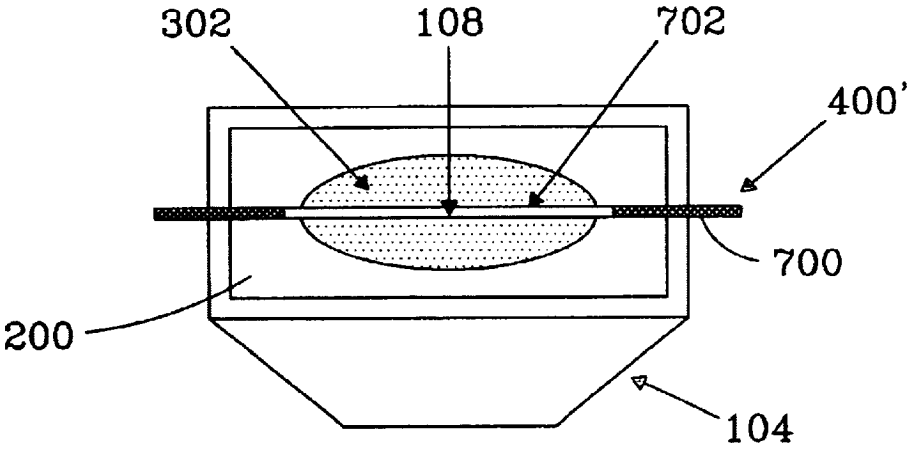
302
108
702
400'
700
200
104

Fig. 7b

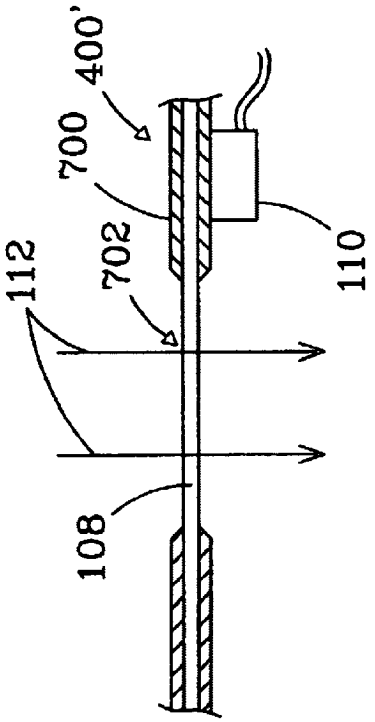

Fig. 8a

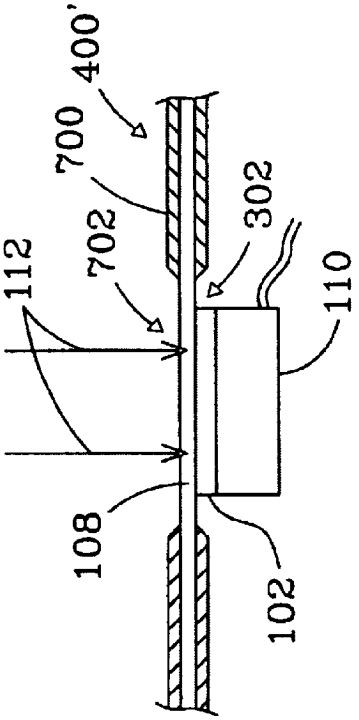

Fig. 8b

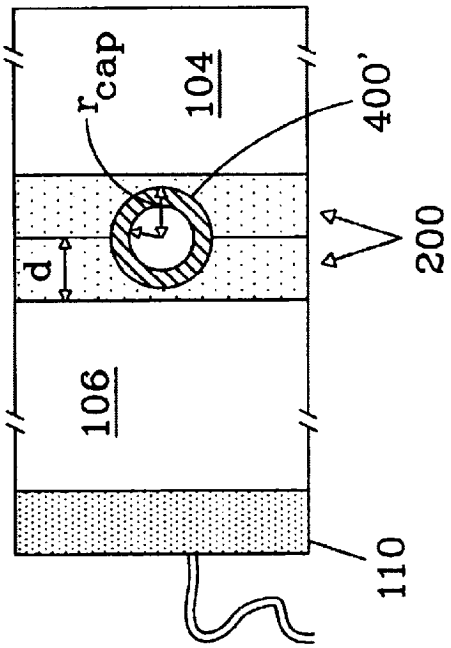

Fig. 7c

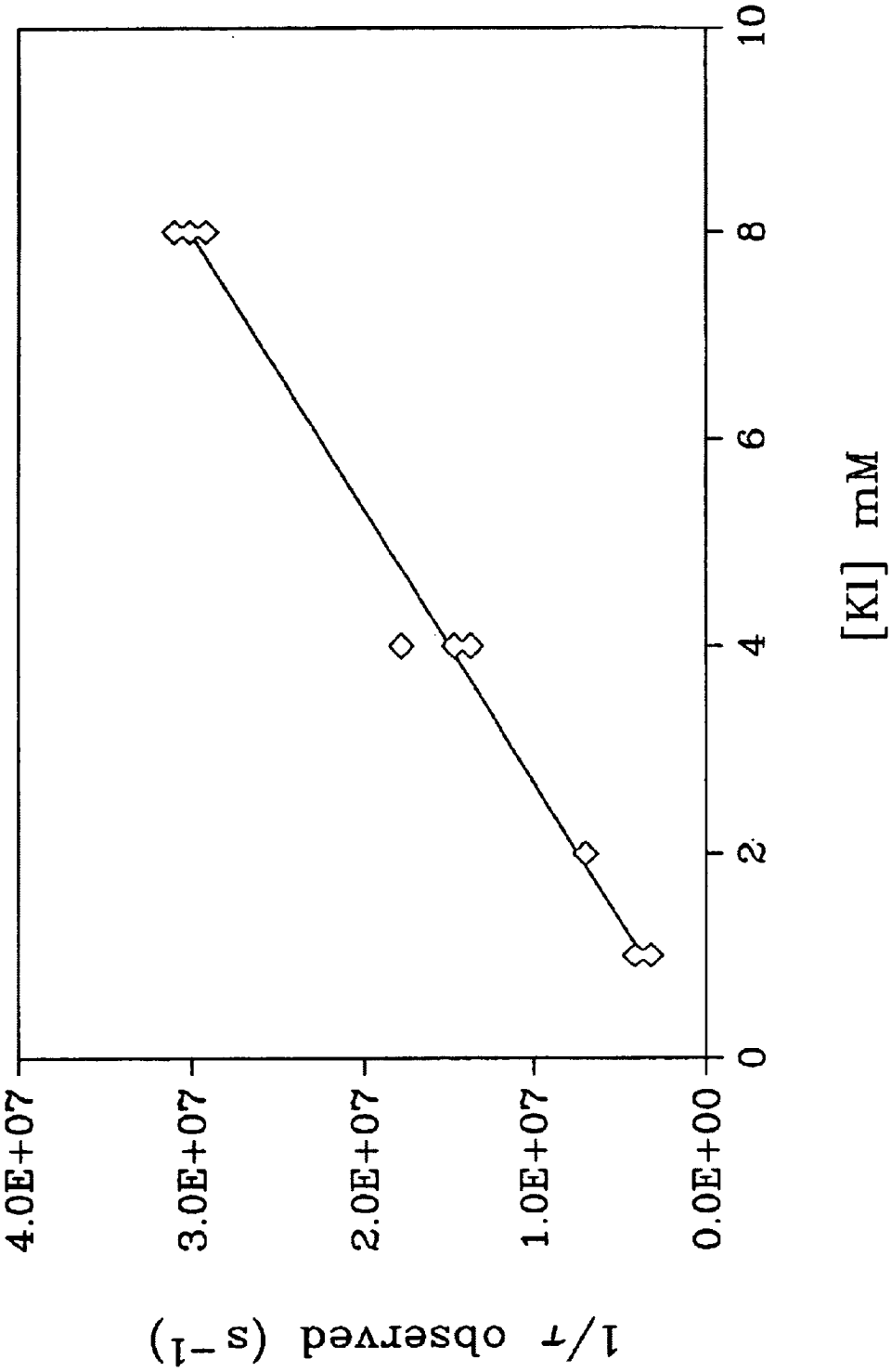

Fig. 9

PHOTOACOUSTIC SAMPLE VESSEL AND METHOD OF ELEVATED PRESSURE OPERATION

CROSS REFERENCES TO RELATED APPLICATIONS

This application is a continuation-in-part of application Ser. No. 09/277,687 filed Mar. 26, 1999 now abandoned.

STATEMENT REGARDING FEDERALLY SPONSORED RESEARCH AND DEVELOPMENT

This invention was made with Government support under Contract DE-AC0676RL01830 awarded by the U.S. Department of Energy. The Government has certain rights in the invention.

FIELD OF THE INVENTION

The present invention relates to photoacoustic analysis of a sample using a photoacoustic sample vessel. As used herein, the sample is a material that may be a gas, liquid, solid, or combination thereof including supercritical fluid, slurry, and suspension.

BACKGROUND OF THE INVENTION

Photoacoustic or optoacoustic methods are used as a tool in many applications to obtain chemical and physical information on the properties of materials in solution, solids, or gases. Absorption of irradiation, for example electromagnetic, by a material generates an electronically/vibrationally-excited state intermediate. Several channels of excited state "deactivation" lead to an observable photo-induced acoustic signal including (1) heat released from the excited state as it relaxes back to the ground state, (2) volume changes in the material due to absorption of light, and/or (3) electrostriction of the media surrounding the material due to polar changes in the excited state.

All three phenomena of heat, volume, and electrostriction generate an acoustic wave that is typically detected with a piezoelectric transducer. A photoacoustic vessel couples the light into the material and couples the resulting acoustic wave to the transducer.

Referring to FIG. **1**, a typical photoacoustic vessel **100** comprises an acoustic detector **110** and an acoustic coupler **102** (usually known as a cuvette) that provides a chamber for holding a sample **108**. The acoustic coupler **102** has a first body **104** (vertical sides or walls) and a second body **106** (bottom). The first body **104** cooperates with the second body **106** (by being attached) to form the chamber. The acoustic detector **110** is mounted on the second body **106**. Thus, upon introduction of electromagnetic energy **112**, for example light, an acoustic signal **114** is generated within the sample **108** and propagates through the sample **108** into and through the acoustic coupler **102** to the acoustic detector **110**.

A disadvantage of the cuvette type photoacoustic vessel is a requirement for a relatively large volume (milliliters) of sample **108** required to perform the measurement. Specifically, in the life sciences fields, new biological samples may be extremely expensive or difficult to obtain, synthesize, or purify. Thus, there is a need for photoacoustic vessels having smaller sample volumes for obtaining important data. Another disadvantage of this technique is the limitation of the sample **108** being at atmospheric pressure due to the chamber provided by the cuvette being open to the environment.

FIG. **2** illustrates an improved photoacoustic vessel **100'** described in U.S. patent application Ser. No. 09/105,781 now U.S. Pat. No. 6,236,455, filed Jun. 26, 1998, incorporated by reference herein to the extent not inconsistent with the disclosure herewith. The photoacoustic vessel **100'** comprises an acoustic detector **110** and an acoustic coupler **102'** (referred to as a prism cell) that provides an enclosed chamber for holding a sample **108**. The acoustic coupler **102'** has a first body **104** and a second body **106** with a shim **200** or spacer therebetween defining the chamber containing the sample **108**. The shim **200** contacts a perimeter of the first and second bodies **104,106** as shown thereby forming a perimeter wall(s). The first body **104** forms a first wall of the chamber and the second body **106** forms a second wall of the chamber. The second body **106** has an acoustic detector **110** mounted thereon. Thus, upon introduction of electromagnetic energy (e.g., light) **112** an acoustic signal **114** is generated within the sample **108** and propagates through the sample **108** into and through the second body **106** to the acoustic detector **110**. Sample volumes of less than 1 ml and as low as 0.1 ml have been achieved with this device.

High-pressure time-resolved photoacoustic studies have been done and obtained results for the kinetics of photo-generated meta-stable intermediates ([a] E. F. Walsh, M. W. George, S. Goff, S. M. Nikiforov, V. K. Popov, X.-Z. Sun, and M. Poliakoff, Energetics of the Reactions of (n_6-C_6H_6) $Cr(CO)_3$ with n-Heptane, N_2, and H_2 Studied by High-Pressure Photoacoustic Calorimetry, *J. Phys. Chem.,* 100 (1996) 19425–19429; [b] E. F. Walsh, V. K. Popov, M. W. George, and M. Poliakoff, Photoacoustic Calorimetry at High Pressure: A New Approach to Determination of Bond Strengths. Estimation of the M—L Bond Dissociation Energy of $M(CO)_5L$ (M=Cr, Mo; L=H_2, N_2) in n-Heptane Solution, *J. Phys. Chem.,* 99 (1995) 12016–20). Pressures up to 130 bar (2000 psi) were reported. In addition to the upper pressure limitation, these systems were not conducive to obtaining time-resolved data, limited to optically dense samples, and had no flow-through capability.

Thus, in spite of these advances, there continue to be applications requiring yet smaller sample volumes (e.g., nanoliters). In addition, because photoacoustic methods generally are highly sensitive but have low selectivity, there remains a need for obtaining dynamic photoacoustic data to enhance the selectivity of the opto- or photo-acoustic technique.

BRIEF SUMMARY OF THE INVENTION

The present invention is an improved photoacoustic vessel and method of photoacoustic analysis. The photoacoustic sample vessel comprises an acoustic detector, an acoustic couplant, and an acoustic coupler having a chamber for holding the acoustic couplant and a sample. The acoustic couplant is selected from the group consisting of liquid, solid, and combinations thereof. Passing electromagnetic energy through the sample generates an acoustic signal within the sample, whereby the acoustic signal propagates through the sample to and through the acoustic couplant to the acoustic detector.

In another embodiment of the present invention, the photoacoustic sample vessel further comprises a sample container, wherein the sample is contained within the sample container and the acoustic signal propagates through the sample into and through the wall of the container into and through the acoustic couplant to the acoustic detector.

In another embodiment of the present invention, the sample is pressurized above atmospheric pressure.

It is an object of the present invention to provide a photoacoustic sample vessel that uses a small sample volume.

It is a further object of the present invention to provide a method of photoacoustic analysis of samples at elevated pressure.

It is a further object of the present invention to provide a method of dynamic photoacoustic analysis.

An advantage of the present invention is the ability to use substantially reduced sample volume needed for a photoacoustic measurement. Specifically, the present invention is capable of using a sample volume of less than 0.1 ml and as low as a few nanoliters. An additional advantage is the capability to perform measurements under elevated pressures as great as 60,000 psi. Further, it is possible to obtain time-resolved data (dynamic signal analysis for greater selectivity) with the present invention. Analysis of the shape of the acoustic waveform provides the selectivity while analysis of the amplitude provides the sensitivity.

The subject matter of the present invention is particularly pointed out and distinctly claimed in the concluding portion of this specification. However, both the organization and method of operation, together with further advantages and objects thereof, may best be understood by reference to the following description taken in connection with accompanying drawings wherein like reference characters refer to like elements.

BRIEF DESCRIPTION OF THE DRAWINGS

FIG. **1** is a cross section view through the centerline of a prior art cuvette type photoacoustic vessel.

FIG. **2** is a cross section view through the centerline of a prism cell type photoacoustic vessel.

FIG. **3***a* is a cross section view through the centerline of a cuvette type photoacoustic sample vessel with an acoustic detector mounted on the acoustic coupler according to the present invention.

FIG. **3***b* is a cross section view through the centerline of a cuvette type photoacoustic sample vessel, similar to that of FIG. **3***a*, except that the electromagnetic energy comes from a different direction and the acoustic detector is mounted on the acoustic coupler in a different location.

FIG. **3***c* is a cross section view through the centerline of a cuvette type photoacoustic sample vessel with an acoustic detector in contact with the acoustic couplant according to the present invention.

FIG. **4** is a cross section view through the centerline of a cuvette type photoacoustic sample vessel having a sample container with an acoustic detector mounted on the acoustic coupler according to the present invention.

FIG. **5** is a cross section view through the centerline of a prism cell type photoacoustic sample vessel having a sample container with an acoustic detector mounted on the acoustic coupler according to the present invention.

FIG. **6***a* is a cross section view through the centerline of a prism cell type photoacoustic sample vessel having a sample container in a channel and with an acoustic detector mounted on the acoustic coupler according to the present invention.

FIG. **6***b* is a cross section view through the centerline of the photoacoustic sample vessel of FIG. **6***a* with a reversed electromagnetic energy direction.

FIG. **6***c* is a cross section view through the centerline of a prism cell type photoacoustic sample vessel having a sample container without a channel and with an acoustic detector mounted on the acoustic coupler according to the present invention.

FIG. **7***a* is a cross section view through the centerline of a prism cell type photoacoustic sample vessel having a capillary tube as the sample container.

FIG. **7***b* is a first section view of FIG. **7***a*.

FIG. **7***c* is a second section view of FIG. **7***a*.

FIG. **8***a* is a section view of a test setup using a capillary tube with no acoustic coupler.

FIG. **8***b* is a section view of a test setup using a capillary tube and a reflector as the acoustic coupler.

FIG. **9** is a plot of $1/\pi$ observed BP^{*3} verses potassium iodide (KI) concentration.

DETAILED DESCRIPTION OF THE INVENTION

The present invention is an improved photoacoustic sample vessel and method of photoacoustic analysis. As illustrated in FIG. **3***a*, the photoacoustic sample vessel **300** of the present invention comprises an acoustic detector **110**, an acoustic couplant **302**, and an acoustic coupler **102** having a chamber for holding the acoustic couplant **302** and a sample **108**. The acoustic couplant **302** is selected from the group consisting of liquid, solid, and combinations thereof. Passing electromagnetic energy **112** through the sample **108** generates an acoustic signal **114** within the sample **108**, whereby the acoustic signal **114** propagates through the sample **108** into and through the acoustic couplant **302**, into and through the acoustic coupler **102** to the acoustic detector **110**.

FIG. **3***b* illustrates another embodiment of the present invention whereby the acoustic detector **110** is mounted on the acoustic coupler **102** at a different location and the electromagnetic energy **112** passes through the sample **108** from a different direction.

FIG. **3***c* illustrates another embodiment of the present invention whereby the acoustic detector **110** is in direct contact with the acoustic couplant **302**. In this embodiment, passing electromagnetic energy **112** through the sample **108** generates an acoustic signal **114** within the sample **108**, whereby the acoustic signal **114** propagates through the sample **108** into and through the acoustic couplant **302** directly to the acoustic detector **110**.

In the embodiments of FIGS. **3***a–c,* there is no physical container between the sample **108** and acoustic couplant **302**. Containment of the sample **108** to allow photoacoustic analysis of the sample **108** while it is in the acoustic couplant **302** may be achieved by a variety of methods known to one skilled in the art. For example, an acoustic couplant **302** that is immiscible in the sample **108** or that has a density different than that of the sample **1108** may be selected.

FIGS. **4–5** illustrate further embodiments of the present invention whereby the sample **108** is contained within a sample container **400** and the acoustic signal **114** propagates through the sample **108** into and through the wall of the sample container **400** into and through the acoustic couplant **302** to the acoustic detector **110**.

It will be apparent to one skilled in the art of photoacoustic analysis that the shape of the chamber provided by the acoustic coupler **102, 102'** may be any shape convenient for passing electromagnetic energy **112** and receiving acoustic signals **114** with an acoustic detector **110**. FIGS. **6***a–c* further exemplify other embodiments of the present invention whereby the first body **104** and second body **106** are

distinguished on the basis of an arbitrary line **600** that passes from the position of the sample container **400** toward an outer surface of the acoustic coupler **102**. In FIG. **6***a*, a chamber is provided for the sample **108**, sample container **400**, and acoustic couplant **302** by a channel in the acoustic coupler **102**. FIG. **6***b* illustrates the embodiment of FIG. **6***a* except that the electromagnetic energy **112** passes through the sample **108** in the sample container **400** from a different direction. In FIG. **6***c*, the chamber is a flat surface whereupon rests the sample container **400** in the acoustic couplant **302**.

The sample container **400** may be of any shape or material conducive to passing electromagnetic energy **112** and an acoustic signal **114**. The sample container **400** may be fully enclosed within the chamber provided by the acoustic coupler **102**, **102'** or the sample container **400** may have a portion extending beyond the chamber. A preferred sample container **400** material is glass, for example quartz glass, most preferably fused silica. The preferred sample container **400** material is compatible with electromagnetic energy from ultraviolet through infrared including the visible spectrum.

Another embodiment of the present invention comprises the sample container **400** comprising a capillary tube **400'** as shown in FIGS. **7***a–c*. Such a sample container **400** design provides the capability of flowing the sample **108** through the photoacoustic sample vessel **300**. Because capillary tubes **400'** are normally provided with a polyamide coating **700**, and because the polyamide coating **700** may interfere with either the electromagnetic energy **112** or the acoustic signal **114**, or both, it is preferred to remove the polyamide coating from a portion **702** of the capillary tube **400'** that is within the chamber. Use of a capillary tube **400'** as the sample container **400** has the advantages of small sample volume and the ability to pressurize the sample **108** above atmospheric pressure, preferably above 1000 atmospheres, more preferably above 2000 atmospheres up to about 4000 atmospheres (60,000 psi) which is below the burst limit of capillary tubes **400'** having an inside diameter of 100–180 μm and an outside diameter of 360 μm. It will be apparent to one skilled in the art that the sample **108** volume of the present invention may be equal to or less than, preferably much less than, the sample volume of the prior art and retains the advantage of elevated pressure capability as well as dynamic signal analysis.

As shown in FIG. **7***c* the sample container **400**, **400'** may be placed in between a pair of shims **200** each having a thickness d, for example 762 μm. The capillary tube **400'** outside radius is shown as r_{cap}, for example 90 μm. The shim(s) **200** may be any material that has a compressive strength to maintain the chamber. In circumstances where it is desired that the sample container **400**, **400'** penetrate the acoustic coupler **102'** as shown, the shim(s) **200** must have sufficient flexibility to conform and fluidically seal the outer surface of the sample container **400**, **400'**. Shim **200** material is any material that forms a seal including but is not limited to metal, polymer, for example Kalrez, and combinations thereof. A polymer, especially Kalrez, is preferred.

A sample container **400** is considered a capillary tube **400'** when it is able to retain liquid water with both ends open so that the water is retained therein by surface tension. Larger sample containers **400** may be used but would require additional sample volume and may have lower pressure burst limit.

The choice of the acoustic couplant **302** in acoustic contact with the sample container **400** includes consideration of both low electromagnetic absorption at the excitation wavelength and the ability to transmit acoustic energy efficiently. The acoustic couplant **302** may be a liquid, solid, or combination thereof (e.g., a suspension or slurry). Liquid includes but is not limited to an organic liquid, such as a hydrocarbon, for example benzene, or an inorganic liquid, for example water. In many cases water is preferred because it has the ability to transmit acoustic energy efficiently. Water is also less costly and environmentally benign. Solid includes but is not limited to polymer, glass, and combinations thereof. The solid may begin in the form of a powder that is placed between the sample container **400** and the walls of the chamber. The powder is subsequently heated and fused or melted then cooled to a solid. The solid may also be a room temperature curing material for example epoxy. It is preferred to match the optical and acoustic properties of the acoustic couplant **302** and the acoustic coupler **102**, **102'** as nearly as possible for maximum signal to noise ratio.

Material and Equipment for Examples

Sample **108**. The solvents, reagent grade, were obtained from Aldrich and used as received. Benzophenone (Bp) and o-hydroxybenzophenone (OHB) were obtained from Aldrich and then recrystallized from methanol for use as the sample **108**.

Two sets of solutions containing (1) benzophenone and (2) OHB were prepared in acetonitrile. Both solutions were diluted with a second stock water solution containing potassium iodide (KI) to yield a set of samples **108** containing equivalent concentration of potassium iodide (KI) and maintaining matching optical densities (0.4 mm^{-1}) with a solvent composition of 9/1 acetonitrile/water. The samples were purged with nitrogen and charged into a gas tight 1000 mL syringe. Two to three data sets of data (R-wave (OHB), S-wave (Bp) and Background (KI/acetonitrile/water) were collected at each KI concentration between 1 and 8 mM.

Sample Container **400**. The sample container **400** was a capillary tube **400'** of quartz having 180 μm ID and a cross sectional area of about 0.025 mm^2. The excitation volume (V_o) in the quenching experiments is thus about 100 nanoliters for a 4 mm length.

Preparation of the capillary tube **400'** required pyrolysis of about 1 cm of the polyamide coating **700** on the 50 cm total length of the capillary tube **400'** to provide an optically transparent portion **702**.

Excitation Sources, Detectors, and Electronics. The electromagnetic energy was laser light as the fundamental line of a Nd:Yag laser (Continuum, Surelite, Santa Clara Calif.) was passed through a third harmonic generator to produce 355 nm light (15 ns FWHM, 10 Hz). An excimer laser (Lambda Physik, XeCl, Ft. Lauderdale Fla.) provided 308 nm light (20 ns FWHM, 5 Hz). Laser energies were measured with a energy meter (Scientech, #P09 joulemeter, Boulder Colo.).

The acoustic detector **110** for the photoacoustic signal was a 0.25 inch diameter, 5 MHz piezoelectric transducer (Panametrics, #A110S, Waltham Mass.). The detector output signal was amplified 100 times and averaged for 20–50 laser pulses. The detected signal was amplified (Panametrics, #5670, 100× gain, or a Stanford Research Systems, #240, 5, 25, 125× gain, Sunnyvale Calif.) and collected using a digitizing oscilloscope (Lecroy, Chestnut Ridge N.Y.). Deconvolution of the experimentally acquired acoustic waveforms was accomplished using Sound Analysis 3000 (Quantum Northwest, Spokane Wash.).

Photoacoustic Sample Vessel **300**. The acoustic coupler **102'** was as shown in FIGS. **7***a–c*. The sample container **400** was a capillary tube **400'** (Polymicro Technologies, 360 mm

OD, 180 and 100 mm ID, Phoenix Ariz.). The shim **200** was two Kalrez shims (Air Oil Products, Dupont #503N, Seattle Wash.) having a thickness of 0.030" to compress the capillary tube **400'** in between, and the acoustic couplant **302** was distilled water.

The optically transparent portion **702** of the capillary tube **400'** was centered and clamped between two shims **200** between the bodies **104**, **106**. Compression of the acoustic coupler **102'** by an external clamp (not shown) permits the shim **200** to form a gasket-tight fit around the capillary. A microliter gas tight syringe **704** was attached to one end of the capillary tube **400'** using a set of Microtight connectors (Upchurch, Oak Harbor Wash.) (not shown) in which an Upchurch F-185X microsleeve (not shown) is slipped over the 360 mm capillary tubing as an assembly and the assembly is inserted into a M-110 minitight Kel-F fitting (not shown) and tightened in a P-624 tefzel female luer (not shown).

The capillary tube **400'** clamped in the center of the acoustic coupler **102'** was centered in the excitation source (not shown) by adjusting the acoustic coupler **102'** in the X-Y plane until the shadow of the capillary tube **400'** as seen on an index card was centered in the beam **112**.

A first test was conducted to attempt to obtain an acoustic signal **114** from a sample **108** within a sample container **400**, specifically a capillary tube **400'**, without both an acoustic couplant **302** and an acoustic coupler **102** as shown in FIG. **8***a*. The capillary tube **400'** had a polyamide coating **700** and a portion **702** wherein the polyamide coating **700** was removed. The acoustic detector **110** was placed upon the capillary tube **400'** a distance of 2–3 inches from the light beam **112** path. The acoustic detector **110** was located at a remote location to prevent a pyroelectric signal from direct absorption of the laser light **112**.

The light beam **112** was passed through the capillary tube **400'**. No acoustic signal **114** was observed at low laser powers (<microjoules/cm^2), and at higher laser powers (millijoules/cm^2) the sample **108** was irreversibly damaged. Even if an acoustic signal **114** could have been observed, the geometry was not conducive to dynamic signal processing.

In a second test, shown in FIG. **8***b*, an acoustic coupler **102** and acoustic couplant **302** were added to the setup. The acoustic coupler **102** was a dielectric mirror with the detector **110** mounted thereon. The acoustic couplant **302** was vacuum grease or water held by surface tension in the cusp between the capillary tube **400'** and the acoustic coupler **102**. The background signal was so large that additional signal processing would be needed to extract the sample signal.

EXAMPLE 1

An experiment was conducted to compare an inorganic liquid (benzene) to an inorganic liquid (water) for the acoustic couplant **302**. Comparison of the acoustic waveforms obtained from irradiation of the PA standard, (OHB), using water and benzene as the acoustic couplant **302** provided two notable observations. First, when water was used as the acoustic couplant **302**, the acoustic waveform arrived at the detector 70 ns before the acoustic waveform obtained when benzene was used as the acoustic couplant **302** because the velocity of sound in water is faster. Second, when water was used as the acoustic couplant **302**, the amplitude of the acoustic waveform is 40% greater than the signal observed when the acoustic couplant **302** was benzene because of a better acoustic impedance match between water and quartz.

These results demonstrated acoustic wave propagation through the photoacoustic sample vessel.

EXAMPLE 2

An experiment was conducted to demonstrate that dynamic photoacoustic experiments are possible with the present invention and to demonstrate utility with different samples **108**.

Benzophenone triplet quenching kinetics. For the dynamic studies, the **355** laser line was attenuated to provide ca. 28 mJ energy incident upon the sample **108**. The energy absorbed (H_n) by the sample **108** was about 1000 nJ.

In the presence of potassium iodide (KI), the triplet excited state (Bp^{*3}) was quenched by an electron transfer mechanism to yield ground state Bp plus heat.

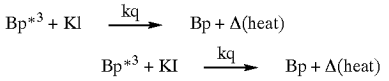

As expected, addition of KI (1–8 mM) to the Bp sample decreased the observed lifetime ($1/\tau_{obs}$) of Bp^{*3}. The rate of triplet quenching calculated from the slope of a plot of $1/\tau_{obs}$ versus [KI] (FIG. **9**). Linear regression yielded a quenching rate constant of $(3.9\pm0.2)\times10^9$ M^{-1} s^{-1} for Bp^{*3} quenching by KI, which compares well with the literature value 4×10^9 M^{-1} s^{-1}. By obtaining the dynamics from the photoacoustic signal the selectivity was significantly enhanced. For example, from the amplitude of the photoacoustic signal a concentration of the solute could be obtained if it was known to be benzophenone. Greater assurance that the solute was Bp may be obtained from the dynamics, the behavior of the photoacoustic signal as a function of its chemistry with a quencher. Few molecules would yield the same dynamic signal thus providing a method of selectivity. In addition, variable pressure capabilities provide a means to probe the dynamics of the photoacoustic signal to further enhance the selectivity of photoacoustic analysis.

Closure

While various embodiments of the present invention have been shown and described, it will be apparent to those skilled in the art that many changes and modifications may be made without departing from the invention in its broader aspects. The appended claims are therefore intended to cover all such changes and modifications as fall within the true spirit and scope of the invention.

It is claimed:

1. A photoacoustic sample vessel for analyzing a sample of between two nanoliters and 1 μl comprising:

(a) an acoustic couplant selected from the group consisting of liquid, solid, and combinations thereof;

(b) an acoustic coupler having a chamber capable of holding a sample having a volume of between two nanoliters and 1 μl and said acoustic couplant; and

(c) an acoustic detector, wherein electromagnetic energy generates an acoustic signal within a portion of said sample having a volume of between two nanoliters and 1 μl, said acoustic signal propagates through said sample to and through said acoustic coupler to said acoustic detector.

2. The photoacoustic sample vessel as recited in claim **1**, wherein said acoustic detector is mounted on said acoustic coupler so that said acoustic signal propagates through said sample to and through said acoustic couplant to and through said acoustic coupler to said acoustic detector.

3. A photoacoustic sample vessel for analyzing a sample of between two nanoliters and 1 μl comprising:

(a) an acoustic couplant selected from the group consisting of liquid, solid, and combinations thereof;

(b) an acoustic coupler having a chamber capable of holding a sample having a volume of between two nanoliters and 1 μl and said acoustic couplant; and

(c) an acoustic detector, wherein electromagnetic energy generates an acoustic signal within a portion of said sample having a volume of between two nanoliters and 1 μl, wherein said acoustic detector is in contact with said acoustic couplant so that said acoustic signal propagates through said sample to and through said acoustic couplant directly to said acoustic detector.

4. The photoacoustic sample vessel as recited in claim **1**, further comprising a sample container, wherein said sample is contained within said sample container and said acoustic signal propagates through said sample to and through a wall of said sample container to and through said acoustic couplant, to and through said acoustic coupler, to said acoustic detector.

5. The photoacoustic sample vessel as recited in claim **4**, wherein said sample is pressurized within said sample container above atmospheric pressure.

6. The photoacoustic sample vessel as recited in claim **4**, wherein said sample container comprises a capillary tube.

7. The photoacoustic sample vessel as recited in claim **6**, wherein said sample is pressurized within said capillary tube above atmospheric pressure.

8. A method of photoacoustically analyzing a sample of between two nanoliters and 1 μl comprising the steps of:

(a) placing a sample of between two nanoliters and 1 μl and an acoustic couplant into a chamber provided by an acoustic coupler, said acoustic couplant selected from the group consisting of liquid, solid, and combinations thereof;

(b) passing electromagnetic energy through said sample and generating an acoustic signal within a portion of said sample having a volume of between two nanoliters and 1 μl, that propagates through the portion of said sample having a volume of between two nanoliters and 1 μl to and through said acoustic coupler to an acoustic detector.

9. The method as recited in claim **8**, further comprising the step of pressurizing said sample above atmospheric pressure.

10. The method as recited in claim **8**, wherein said sample is contained within a sample container so that said acoustic signal propagates through said sample to and through the wail of said sample container to and through said acoustic couplant, to and through said acoustic coupler, to said acoustic detector.

11. The method as recited in claim **10**, further comprising the step of pressurizing said sample at a pressure less than a burst pressure of said sample container.

12. The method as recited in claim **10**, wherein said sample container comprises a capillary tube.

* * * * *